Applications

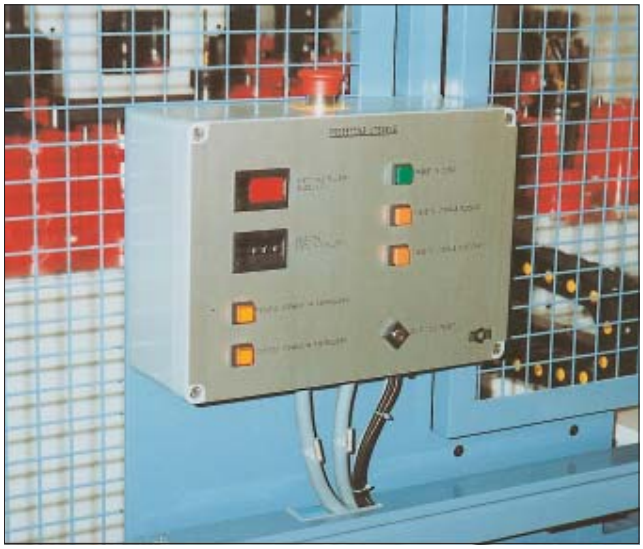

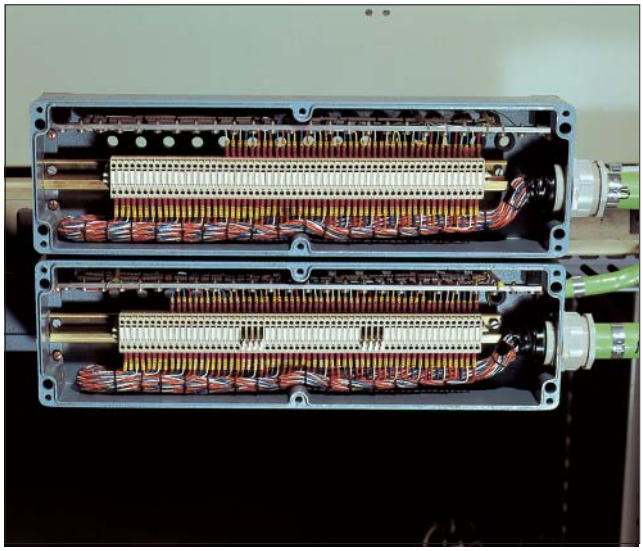

UL 50

- Robust plastic enclosure for automation technology and mechanical engineering
- Fastening possibility for DIN rails and mounting plates
- Universal configuration

Included in delivery

Plastic enclosure made of glass fibre reinforced polyester, consisting of lid, seal, incl. captive +/- stainless steel screws, base with 2 or 4 earthing screws

Technical data

Material:
glass fibre reinforced polyester

Colour:
similar to RAL 7000, squirrel grey

Ingress protection:
IP 66 to EN 60529

Impact resistance:
>7 Joule, EN 50014

Temperature range:

PUR (polyurethane) seal (std.):	-40°C to +90°C
CR (chloroprene) seal:	-40°C to +100°C
VMQ (silicone) seal (optional):	-60°C to +130°C

Surface resistance:
$>10^{12}$ Ohm to DIN 53482

Flammability:
V0 / self-extinguishing, UL 94

Insulation:
fully insulated to VDE 0100

Dielectric strength:
18 KV / mm

Toxicity:
free from halogen

Polyester Standard

Programme range

Type	W x L x H (mm)	Type	W x L x H (mm)
02.06 06 03	55 x 55 x 37	***02.12 22 09***	120 x 220 x 90
02.06 06 06	55 x 55 x 59	***02.16 16 09***	160 x 160 x 90
02.08 08 06	75 x 80 x 55	***02.16 26 09***	160 x 260 x 90
02.08 08 08	75 x 80 x 75	***02.16 36 09***	160 x 360 x 90
02.08 11 06	75 x 110 x 55	***02.16 56 09***	160 x 560 x 90
02.08 11 08	75 x 110 x 75	***02.25 26 12***	250 x 255 x 120
02.08 16 06	75 x 160 x 55	***02.25 26 16***	250 x 255 x 160
02.08 16 08	75 x 160 x 75	***02.25 40 12***	250 x 400 x 120
02.08 19 06	75 x 190 x 55	***02.25 40 16***	250 x 400 x 160
02.08 19 08	75 x 190 x 75	***02.25 60 12***	250 x 600 x 120
02.08 23 06	75 x 230 x 55	***02.36 36 09***	360 x 360 x 90
02.08 23 08	75 x 230 x 75	***02.41 40 12***	405 x 400 x 120
02.10 32 08	100 x 320 x 80	***02.41 40 20***	405 x 400 x 200
02.12 12 09	120 x 122 x 90		

Accessories and versions

Type	DIN rail* for terminals		Mounting plate thickness in mm	External mounting brackets set	Aluminium external hinge approx. 125° set	Allen lid screws	Silicone lid seal	Sealable lid screws	EMC version
	TS 15	TS 35		[2]	[3]	[2]		[2]	
02.06 06 03	•								
02.06 06 06	•								
02.08 08 06	•		2.0 [4]	•		•	•	•	•
02.08 08 08	•		2.0 [4]	•		•	•	•	•
02.08 11 06	•		2.0 [4]	•		•	•	•	•
02.08 11 08	•		2.0 [4]	•		•	•	•	•
02.08 16 06	•		2.0 [4]	•		•	•	•	•
02.08 16 08	•		2.0 [4]	•		•	•	•	•
02.08 19 06	•		2.0 [4]	•		•	•	•	•
02.08 19 08	•		2.0 [4]	•		•	•	•	•
02.08 23 06	•			•		•	•	•	•
02.08 23 08	•			•		•	•	•	•
02.10 32 08	•		1.5 [1]	•	•	•	•	•	•
02.12 12 09		•	1.5 [1]	•	•	•	•	•	•
02.12 22 09		•	1.5 [1]	•	•	•	•	•	•
02.16 16 09		•	1.5 [1]	•	•	•	•	•	•
02.16 26 09		•	1.5 [1]	•	•	•	•	•	•
02.16 36 09		•	1.5 [1]	•	•	•	•	•	•
02.16 56 09		•	2.0 [1]	•	•	•	•	•	•
02.25 26 12		•	2.0 [1]	•	•	•	•	•	•
02.25 26 16		•	2.0 [1]	•	•	•	•		•
02.25 40 12		•	2.0 [1]	•	•	•	•	•	•
02.25 40 16		•	2.0 [1]	•	•	•	•		•
02.25 60 12		•	2.0 [1]	•	•	•	•	•	•
02.36 36 09		•	2.0 [1]	•	•	•	•	•	•
02.41 40 12		•	2.0 [1]	•	•	•	•	•	•
02.41 40 20		•	2.0 [1]	•	•	•	•	•	•

[1]) Galvanized sheet steel [2]) Stainless steel [3]) Please quote installation side A-D when ordering [4]) Laminated paper

* TS 32 on request

Terminal mounting

	Phoenix															Earth conductor connections													
DIN rail TS 15	X	X	X																										
DIN rail TS 35				X	X	X	X	X	X	X	X	X	X	X	X														
Voltage (V)	250	400	500	500	800	800	800	800	800	800	1000	1000	1000	1000	1000														
Current (A)	24	32	41	17	24	32	41	57	76	101	150	150	232	309	415														
Nom. cross section (mm²)	2.5	3	5	1.5	2.5	2.5	4	6	10	16	35	50	95	150	240														
Terminal width (mm)	5.2	5.2	6.2	4.2	5.2	5.2	6.2	8.2	10.2	12.2	15.2	20	25	31	36														
Terminal type Type	MBK 2,5 E	MBK 3 / E-Z	MBK 5 / E-Z	UK 1,5 N	UK 2,5 N	UK 3 N	UK 5 N	UK 6 N	UK 10 N	UK 16 N	UK 35	UKH 50	UKH 95	UKH 150	UKH 240	MSLKG 5 insulated, green/yellow	USLKG 1,5 N insulated green/yellow	USLKG 2,5 N insulated green/yellow	USLKG 6 N insulated green/yellow	USLKG 10 N insulated green/yellow	USKLG 16 N insulated green/yellow	USLKG 3 insulated green/yellow	USLKG 5 insulated green/yellow	USLKG 50 insulated green/yellow	USLKG 95 insulated green/yellow		Earthing bar 2.5 mm² with cable lug max. 10 mm²	Earthing screw M4 with cable lug max. 6 mm²	M6 with cable lug max. 35 mm²	
02.06 06 03																													
02.06 06 06																												1		
02.08 08 06	9	9	7																									2		
02.08 08 08	9	9	7																									2		
02.08 11 06	16	16	13																									2		
02.08 11 08	16	16	13																									2		
02.08 16 06	25	25	21																									2		
02.08 16 08	25	25	21																									2		
02.08 19 06	30	30	25																									2		
02.08 19 08	30	30	25																									2		
02.08 23 06	39	39	32																									2		
02.08 23 08	39	39	32																									2		
02.10 32 08	55	55	46																									2		
02.12 12 09				20	16	16	13	10	8											as required							5		4	
02.12 22 09				43	35	35	29	22	17	15	12																13		4	
02.16 16 09				29	23	23	19	14	11	10	8																8		4	
02.16 26 09				53	42	42	35	27	21	18	14																16		4	
02.16 36 09				76	61	61	51	39	31	26	21																23		4	
02.16 56 09				124	100	100	84	63	51	42	34																38		4	
02.25 26 12				51*	41*	41*	34*	26*	21*	17*	14*																16		4	
02.25 26 16				51*	41*	41*	34*	26*	21*	17*	14*																16		4	
02.25 40 12				85*	69*	69*	57*	43*	35*	29*	23*	17*															26		4	
02.25 40 16				85*	69*	69*	57*	43*	35*	29*	23*	17*															26		4	
02.25 60 12				133*	107*	107*	90*	68*	54*	45*	36*	27*															38		4	
02.36 36 09				76**	61**	61**	51**	39**	31**	26*	21*																23		4	
02.41 40 12				85**	59**	69**	57**	43**	35**	29*	23*	17*	14														26		4	
02.41 40 20				85**	59**	69**	57**	43**	35**	29*	23*	17*	14	12	10												26		4	

* 2 DIN rails possible = double number of terminals
** 3 DIN rails possible = triple number of terminals

Terminal mounting

	Weidmüller																			Earth conductor connections								
DIN rail TS 15				X	X	X	X																					
DIN rail TS 35								X	X	X	X	X	X	X	X	X												
Voltage (V)	400	400	400	250	275	250	400	500	800	800	800	800	1000	1000	1000	1000												
Current (A)	32	32	32	17	15	24	32	24	24	32	41	57	76	125	192	232												
Nom. cross section (mm²)	4	4	4	1.5	1.5	2.5	4	2.5	2.5	4	6	10	16	35	70	95												
Terminal width (mm)				5	3.5	5	6	5	5	6	8	10	12	16	20.5	27												
Terminal type Type	BK 4 (4 pole)	BK 6 (6 pole)	BK 12 (12 pole)	AKZ 1,5	WDU 1,5 / R 3,5	AKZ 2,5	AKZ 4	WDU 2,5 N	WDU 2,5	WDU 4	WDU 6	WDU 10	WDU 16	WDU 35	WDU 70 N	WDU 70 / 95				WPE 2,5 green/yellow	WPE 4 green/yellow	WPE 6 green/yellow	WPE 10 green/yellow	WPE 16 green/yellow	WPE 35 green/yellow	WPE 70 / 95 green/yellow	Earthing bar 2.5 mm² with cable lug max. 10 mm²	Earthing screw M4 with cable lug max. 6 mm²	M6 with cable lug max. 35 mm²
02.06 06 03	1																											
02.06 06 06	1																										1	
02.08 08 06	1	1		8	11	8	6	8																			2	
02.08 08 08	1	1		9	11	8	6	8																			2	
02.08 11 06		1	1	15	21	15	12	15																			2	
02.08 11 08		1	1	15	21	15	12	15																			2	
02.08 16 06			1	25	36	25	21	25																			2	
02.08 16 08			1	25	36	25	21	25																			2	
02.08 19 06				30	43	30	25	30																			2	
02.08 19 08				30	43	30	25	30																			2	
02.08 23 06				39	56	39	32	39																			2	
02.08 23 08				39	56	39	32	39																			2	
02.10 32 08				56	80	56	47	56																			2	
02.12 12 09									16	13	10												as required			5		4
02.12 22 09									35	29	22															13		4
02.16 16 09									23	19	14	11	9													8		4
02.16 26 09									43	36	27	21	18													16		4
02.16 36 09									63	52	39	31	26													23		4
02.16 56 09									103	86	64	51	43													38		4
02.25 26 12									42*	35*	26*	21*	17*	13	10											16		4
02.25 26 16									42*	35*	26*	21*	17*	13	10	7										16		4
02.25 40 12									71*	59*	44*	35*	29*	22*	17											26		4
02.25 40 16									71*	59*	44*	35*	29*	22*	17											26		4
02.25 60 12									111*	92*	69*	55*	46*	34*	27											38		4
02.36 36 09									63**	52**	39**	31**	26*	19*												23		4
02.41 40 12									71**	59**	44**	35**	29*	22*	17											26		4
02.41 40 20									71**	59**	44**	35**	29*	22*	17	13										26		4

* 2 DIN rails possible = double number of terminals
** 3 DIN rails possible = triple number of terminals

Accessories

External hinge
Material cast aluminium
Opening angle 150°
(set = 2 pcs.)

Order No. ***10.02 70 01***

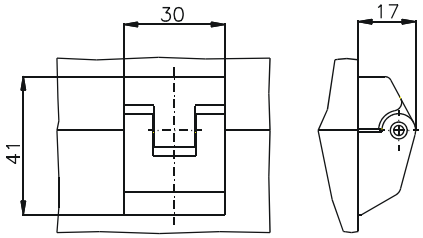

External mounting brackets (Set = 4 pcs.)

Order No.	for enclosure
10.03 11 01	02.08 08 06 - 02.08 23 06
10.03 11 02	02.10 32 08 - 02.41 40 12

Type 10.03 11 01

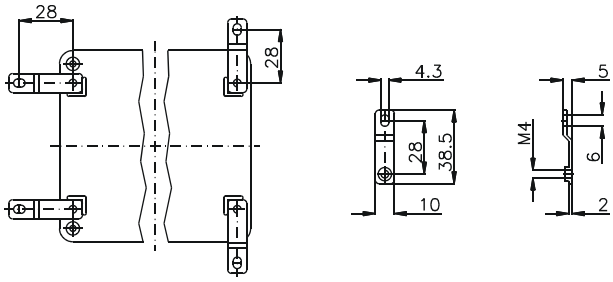

Type 10.03 11 02

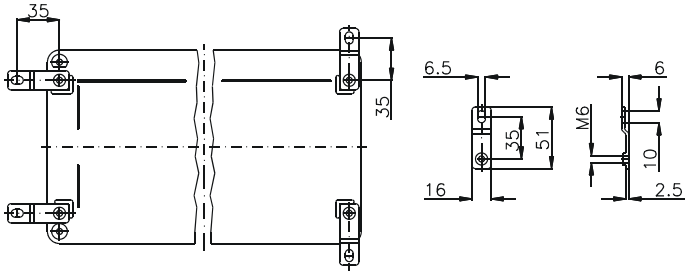

Type: ***02.06 06 03*** External dimensions: ***55 x 55 x 37 mm*** Weight: ***100 g***

DIN rail length in mm	max. fitting length in mm	Mounting plate (thickness in mm)	External mounting brackets	External hinge* set	EMC version	Allen lid screws	Silicone lid seal	Sealable lid screws

Maximum number of cable glands to ***DIN 50262****

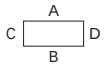

M	Corner dim.	Side A/B	Side C/D	***PG***	Corner dim.	Side A/B	Side C/D
12	17.25	2	2	7	17.25	2	2
16	25.30	1	1	9	21.85	1	1
20	27.60			11	25.30		
25	37.95			13.5	27.60		
32	48.30			16	31.05		
40	60.95			21	37.95		
50	69.00			29	48.30		
63	74.75			36	60.95		
				42	69.00		
				48	74.75		

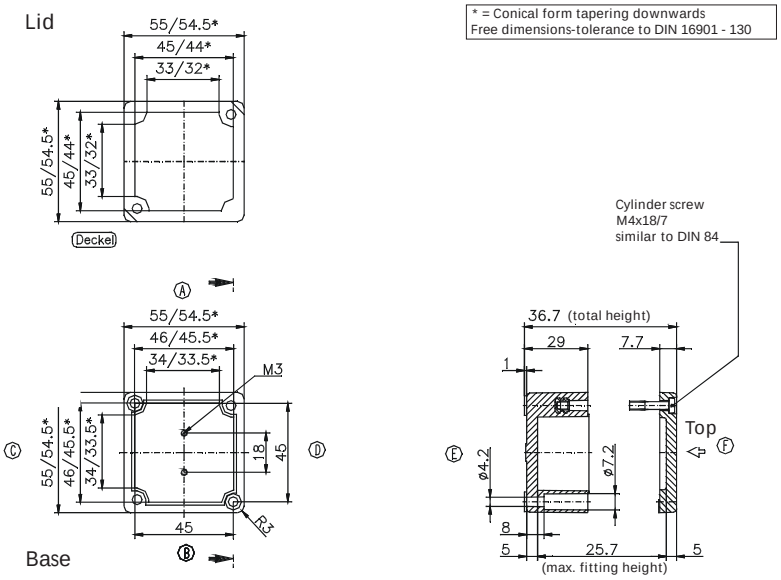

Type: ***02.06 06 06*** External dimensions: ***55 x 55 x 59 mm*** Weight: ***130 g***

DIN rail length in mm	max. fitting length in mm	Mounting plate (thickness in mm)	External mounting brackets	External hinge* set	EMC version	Allen lid screws	Silicone lid seal	Sealable lid screws

Maximum number of cable glands to ***DIN 50262****

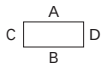

M	Corner dim.	Side A/B	Side C/D	***PG***	Corner dim.	Side A/B	Side C/D
12	17.25	5	5	7	17.25	5	5
16	25.30	2	2	9	21.85	3	3
20	27.60	1	1	11	25.30	2	2
25	37.95	1	1	13.5	27.60	1	1
32	48.30	1	1	16	31.05	1	1
40	60.95			21	37.95	1	1
50	69.00			29	48.30		
63	74.75			36	60.95		
				42	69.00		
				48	74.75		

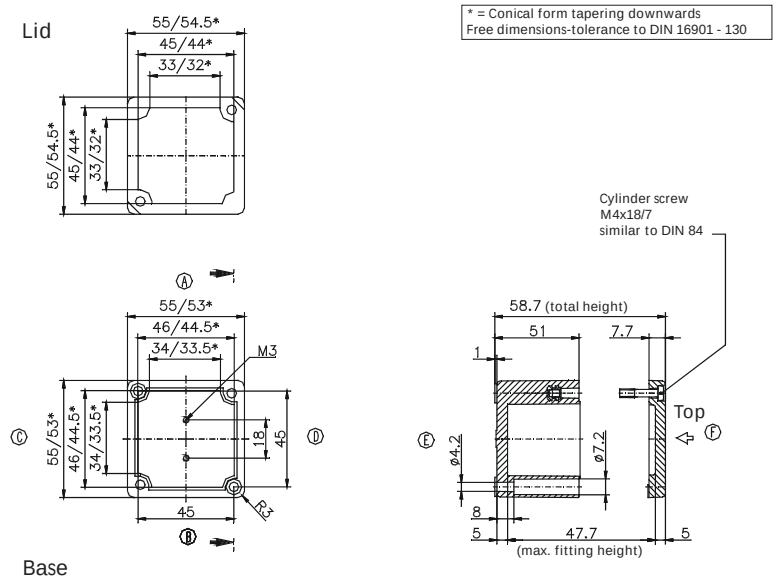

Type: ***02.08 08 06*** External dimensions: ***75 x 80 x 55 mm*** Weight: ***230 g***

DIN rail length in mm	max. fitting length in mm	Mounting plate (thickness in mm)	External mounting brackets	External hinge* set	EMC version	Allen lid screws	Silicone lid seal	Sealable lid screws
TS 15								
63	49	2	•		•	•	•	•

Maximum number of cable glands to ***DIN 50262****

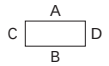

M	Corner dim.	Side A/B	Side C/D	*PG*	Corner dim.	Side A/B	Side C/D
12	17,25	6	3	7	17,25	6	3
16	25,30	2	1	9	21,85	4	1
20	27,60	2	1	11	25,30	2	1
25	37,95	1		13,5	27,60	2	1
32	48,30			16	31,05	2	1
40	60,95			21	37,95	1	
50	69,00			29	48,30		
63	74,75			36	60,95		
				42	69,00		
				48	74,75		

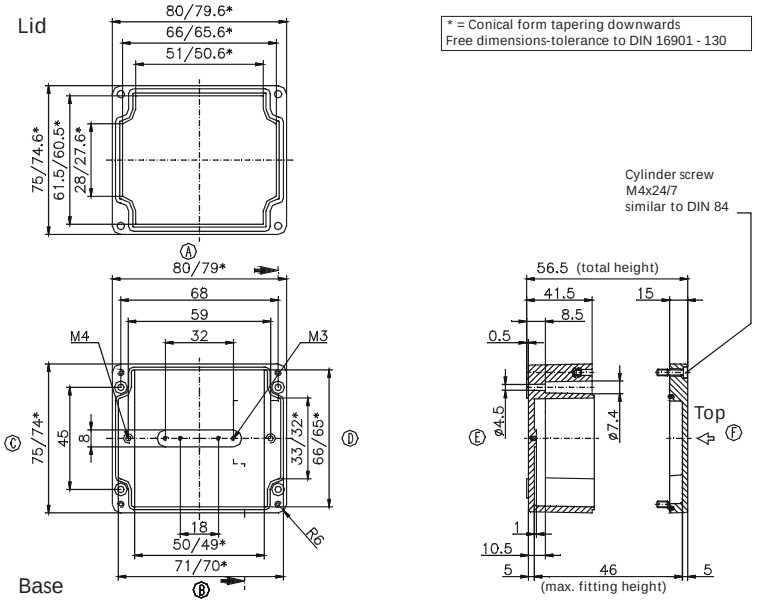

Type: ***02.08 08 08*** External dimensions: ***75 x 80 x 75 mm*** Weight: ***300 g***

DIN rail length in mm	max. fitting length in mm	Mounting plate (thickness in mm)	External mounting brackets	External hinge* set	EMC version	Allen lid screws	Silicone lid seal	Sealable lid screws
TS 15								
63	49	2	•		•	•	•	•

Maximum number of cable glands to ***DIN 50262****

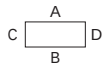

M	Corner dim.	Side A/B	Side C/D	*PG*	Corner dim.	Side A/B	Side C/D
12	17,25	9	5	7	17,25	9	5
16	25,30	5	2	9	21,85	6	3
20	27,60	4	2	11	25,30	4	2
25	37,95	1	1	13,5	27,60	4	2
32	48,30	1	1	16	31,05	3	1
40	60,95			21	37,95	1	1
50	69,00			29	48,30	1	
63	74,75			36	60,95		
				42	69,00		
				48	74,75		

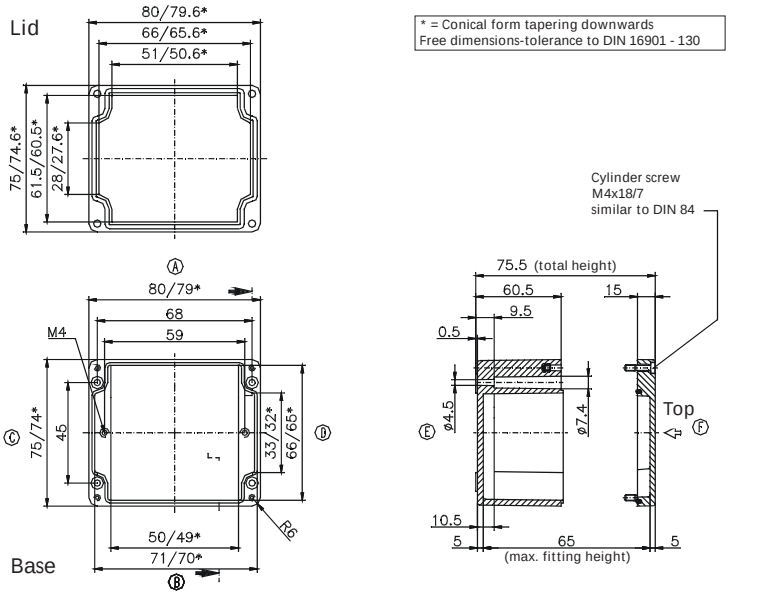

Type: **02.08 11 06** External dimensions: ***75 x 110 x 55 mm*** Weight: ***295 g***

DIN rail length in mm	max. fitting length in mm	Mounting plate (thickness in mm)	External mounting brackets	External hinge* set	EMC version	Allen lid screws	Silicone lid seal	Sealable lid screws
TS 15								
98	79	2	•		•	•	•	•

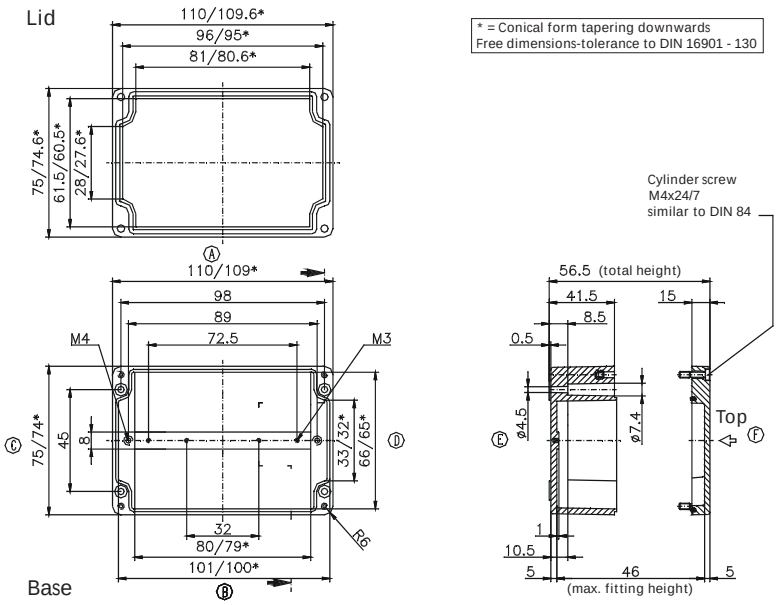

Maximum number of cable glands to ***DIN 50262****

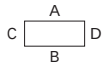

M	Corner dim.	Side A/B	Side C/D	***PG***	Corner dim.	Side A/B	Side C/D
12	17.25	10	3	7	17.25	10	3
16	25.30	4	1	9	21.85	6	1
20	27.60	3	1	11	25.30	4	1
25	37.95	2		13.5	27.60	3	1
32	48.30			16	31.05	3	1
40	60.95			21	37.95	2	
50	69.00			29	48.30		
63	74.75			36	60.95		
				42	69.00		
				48	74.75		

Type: **02.08 11 08** External dimensions: ***75 x 110 x 75 mm*** Weight: ***360 g***

DIN rail length in mm	max. fitting length in mm	Mounting plate (thickness in mm)	External mounting brackets	External hinge* set	EMC version	Allen lid screws	Silicone lid seal	Sealable lid screws
TS 15								
98	79	2	•		•	•	•	•

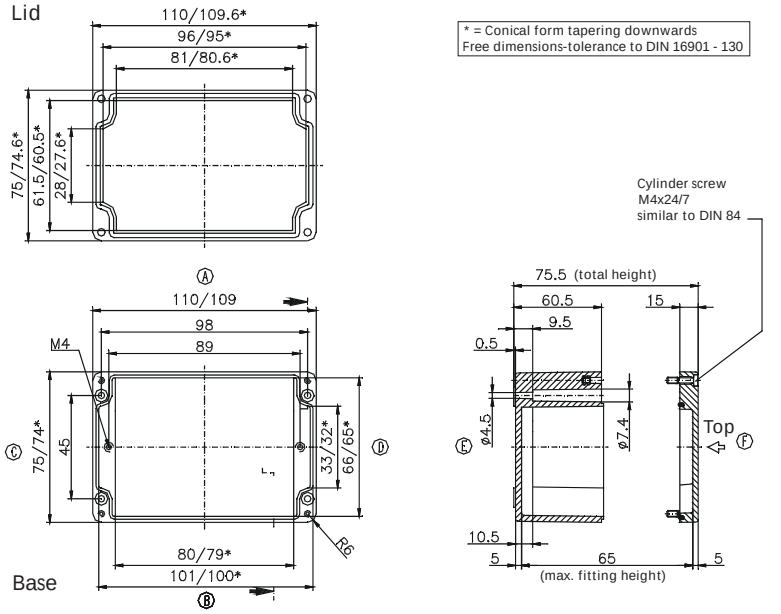

Maximum number of cable glands to ***DIN 50262****

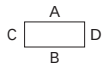

M	Corner dim.	Side A/B	Side C/D	***PG***	Corner dim.	Side A/B	Side C/D
12	17.25	15	5	7	17,25	15	5
16	25.30	6	2	9	21,85	9	3
20	27.60	6	1	11	25,30	6	2
25	37.95	2	1	13.5	27,60	6	1
32	48.30	2	1	16	31,05	5	1
40	60.95			21	37,95	2	1
50	69.00			29	48,30	2	
63	74.75			36	60,95		
				42	69,00		
				48	74,75		

Type: ***02.08 16 06*** External dimensions: ***75 x 160 x 55 mm*** Weight: ***405 g***

DIN rail length in mm	max. fitting length in mm	Mounting plate (thickness in mm)	External mounting brackets	External hinge* set	EMC version	Allen lid screws	Silicone lid seal	Sealable lid screws
TS 15								
148	129	2	•		•	•	•	•

Maximum number of cable glands to ***DIN 50262****

A C D B

M	Corner dim.	Side A/B	Side C/D	*PG*	Corner dim.	Side A/B	Side C/D
12	17.25	16	3	7	17.25	16	2
16	25.30	6	1	9	21.85	9	1
20	27.60	5	1	11	25.30	6	1
25	37.95	3		13.5	27.60	5	1
32	48.30			16	31.05	4	1
40	60.95			21	37.95	3	
50	69.00			29	48.30		
63	74.75			36	60.95		
				42	69.00		
				48	74.75		

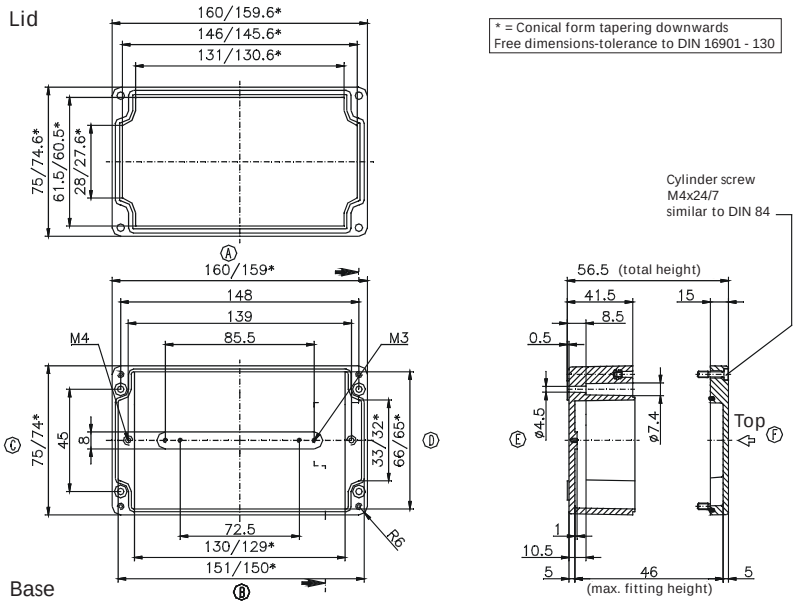

Type: ***02.08 16 08*** External dimensions: ***75 x 160 x 75 mm*** Weight: ***460 g***

DIN rail length in mm	max. fitting length in mm	Mounting plate (thickness in mm)	External mounting brackets	External hinge* set	EMC version	Allen lid screws	Silicone lid seal	Sealable lid screws
TS 15								
148	129	2	•		•	•	•	•

Maximum number of cable glands to ***DIN 50262****

A C D B

M	Corner dim.	Side A/B	Side C/D	*PG*	Corner dim.	Side A/B	Side C/D
12	17,25	18	5	7	17,25	18	5
16	25,30	8	2	9	21,85	11	3
20	27,60	8	2	11	25,30	8	2
25	37,95	3	1	13,5	27,60	8	2
32	48,30	2	1	16	31,05	5	1
40	60,95			21	37,95	3	1
50	69,00			29	48,30	2	
63	74,75			36	60,95		
				42	69,00		
				48	74,75		

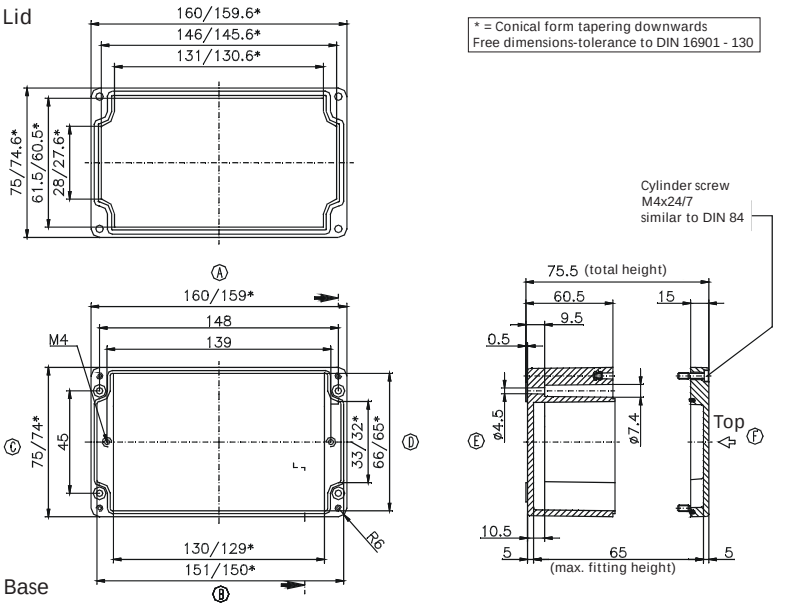

Type: **02.08 19 06** External dimensions: ***75 x 190 x 55 mm*** Weight: ***450 g***

DIN rail length in mm	max. fitting length in mm	Mounting plate (thickness in mm)	External mounting brackets	External hinge* set	EMC version	Allen lid screws	Silicone lid seal	Sealable lid screws
TS 15								
174	159	2	•		•	•	•	•

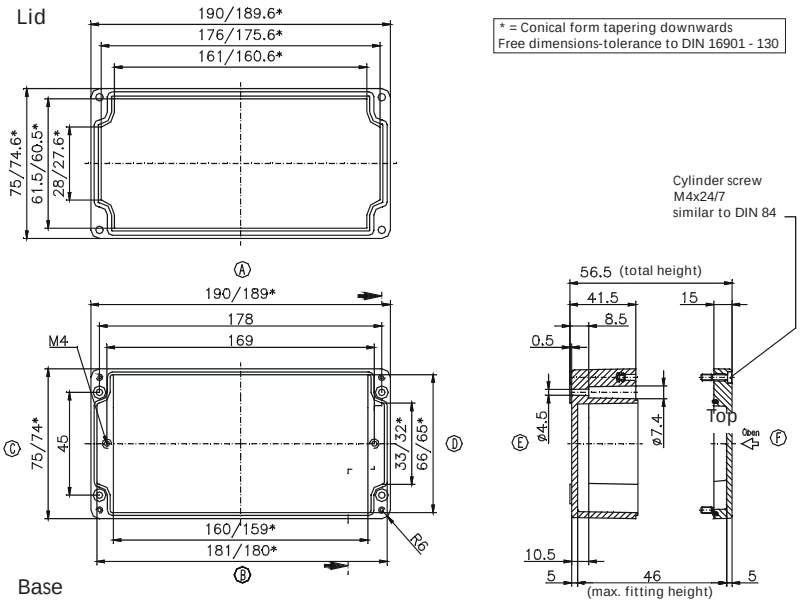

Maximum number of cable glands to ***DIN 50262****

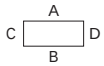

M	Corner dim.	Side A/B	Side C/D	***PG***	Corner dim.	Side A/B	Side C/D
12	17.25	20	4	7	17.25	20	4
16	25.30	8	1	9	21.85	15	2
20	27.60	7	1	11	25.30	8	1
25	37.95	4	1	13.5	27.60	7	1
32	48.30			16	31.05	6	1
40	60.95			21	37.95	4	
50	69.00			29	48.30		
63	74.75			36	60.95		
				42	69.00		
				48	74.75		

Type: **02.08 19 08** External dimensions: ***75 x 190 x 75 mm*** Weight: ***530 g***

DIN rail length in mm	max. fitting length in mm	Mounting plate (thickness in mm)	External mounting brackets	External hinge* set	EMC version	Allen lid screws	Silicone lid seal	Sealable lid screws
TS 15								
174	159	2	•		•	•	•	•

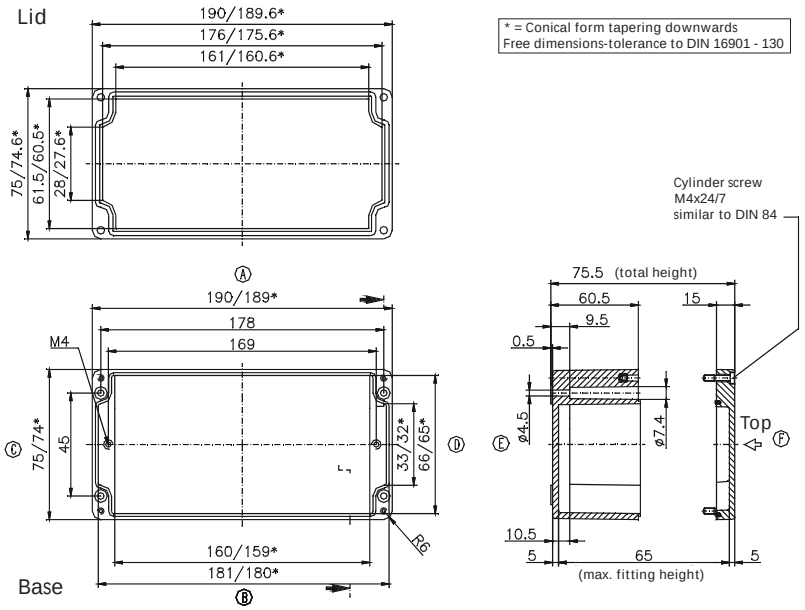

Maximum number of cable glands to ***DIN 50262****

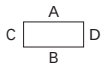

M	Corner dim.	Side A/B	Side C/D	***PG***	Corner dim.	Side A/B	Side C/D
12	17.25	28	6	7	17.25	27	5
16	25.30	12	2	9	21.85	18	3
20	27.60	12	2	11	25.30	12	2
25	37.95	5	1	13.5	27.60	12	2
32	48.30	3	1	16	31.05	10	1
40	60.95			21	37.95	5	1
50	69.00			29	48.30	3	
63	74.75			36	60.95		
				42	69.00		
				48	74.75		

Type: ***02.08 23 06*** External dimensions: ***75 x 230 x 55 mm*** Weight: ***575 g***

DIN rail length in mm	max. fitting length in mm	Mounting plate (thickness in mm)	External mounting brackets	External hinge* set	EMC version	Allen lid screws	Silicone lid seal	Sealable lid screws
TS 15								
218	199		•		•	•	•	•

Maximum number of cable glands to ***DIN 50262****

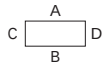

M	Corner dim.	Side A/B	Side C/D	***PG***	Corner dim.	Side A/B	Side C/D
12	17,25	22	3	7	17,25	20	3
16	25,30	10	1	9	21,85	14	1
20	27,60	8	1	11	25,30	8	1
25	37,95	4	1	13,5	27,60	8	1
32	48,30			16	31,05	6	1
40	60,95			21	37,95	4	1
50	69,00			29	48,30		
63	74,75			36	60,95		
				42	69,00		
				48	74,75		

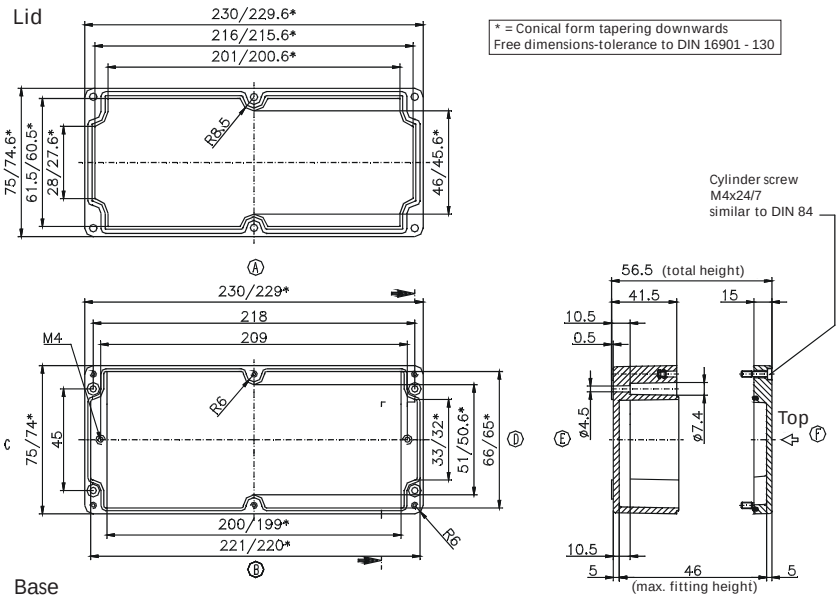

Type: ***02.08 23 08*** External dimensions: ***75 x 230 x 75 mm*** Weight: ***670 g***

DIN rail length in mm	max. fitting length in mm	Mounting plate (thickness in mm)	External mounting brackets	External hinge* set	EMC version	Allen lid screws	Silicone lid seal	Sealable lid screws
TS 15								
218	199		•		•	•	•	•

Maximum number of cable glands to ***DIN 50262****

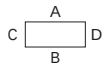

M	Corner dim.	Side A/B	Side C/D	***PG***	Corner dim.	Side A/B	Side C/D
12	17.25	30	6	7	17.25	30	6
16	25.30	16	2	9	21.85	18	3
20	27.60	12	2	11	25.30	16	2
25	37.95	6	1	13.5	27.60	12	2
32	48.30	4	1	16	31.05	10	1
40	60.95			21	37.95	6	1
50	69.00			29	48.30	4	
63	74.75			36	60.95		
				42	69.00		
				48	74.75		

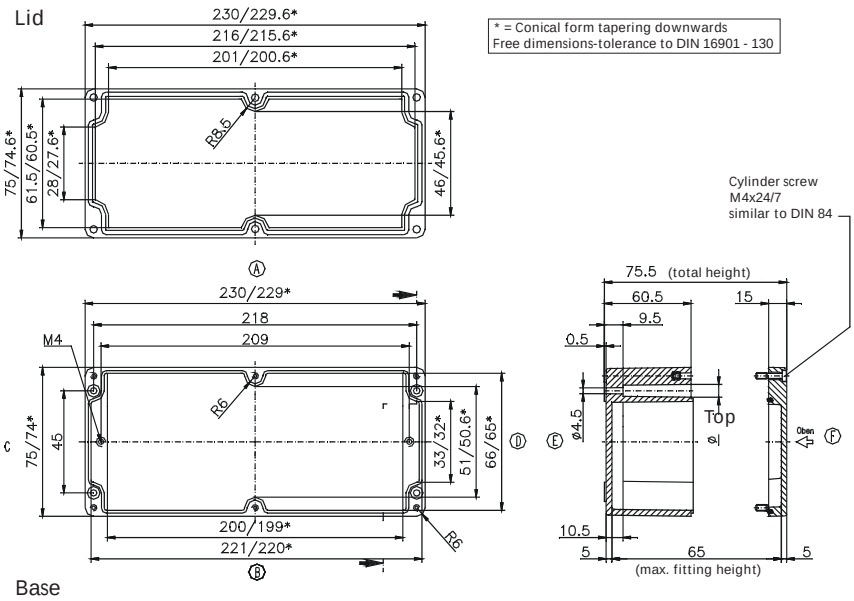

Type: **02.10 32 08** External dimensions: ***100 x 320 x 80 mm*** Weight: ***1300 g***

DIN rail length in mm	max. fitting length in mm	Mounting plate (thickness in mm)	External mounting brackets	External hinge* set	EMC version	Allen lid screws	Silicone lid seal	Sealable lid screws
TS 15								
304	285	1.5	•		•	•	•	•

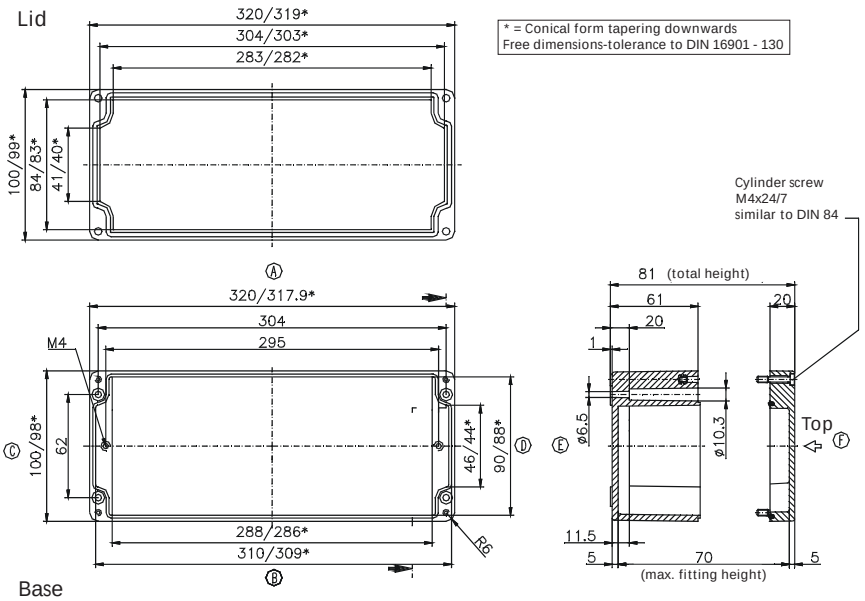

Maximum number of cable glands to ***DIN 50262****

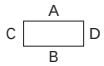

M	Corner dim.	Side A/B	Side C/D	*PG*	Corner dim.	Side A/B	Side C/D
12	17.25	48	6	7	17.25	48	6
16	25.30	23	4	9	21.85	33	4
20	27.60	20	2	11	25.30	22	4
25	37.95	9	1	13.5	27.60	20	2
32	48.30	6	1	16	31.05	17	1
40	60.95			21	37.95	9	1
50	69.00			29	48.30	6	1
63	74.75			36	60.95		
				42	69.00		
				48	74.75		

Type: **02.12 12 09** External dimensions: ***120 x 122 x 90 mm*** Weight: ***750 g***

DIN rail length in mm	max. fitting length in mm	Mounting plate (thickness in mm)	External mounting brackets	External hinge* set	EMC version	Allen lid screws	Silicone lid seal	Sealable lid screws
TS 35								
107	85	1.5	•	•	•	•	•	•

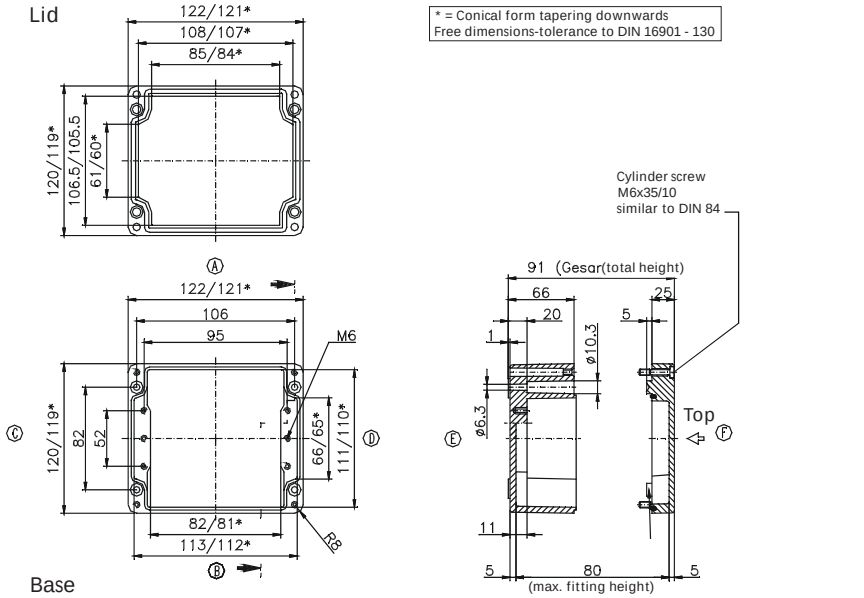

Maximum number of cable glands to ***DIN 50262****

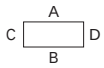

M	Corner dim.	Side A/B	Side C/D	*PG*	Corner dim.	Side A/B	Side C/D
12	17.25	18	12	7	17.25	18	12
16	25.30	8	5	9	21.85	12	6
20	27.60	6	4	11	25.30	8	5
25	37.95	3	2	13.5	27.60	6	4
32	48.30	2	1	16	31.05	6	3
40	60.95	1	1	21	37.95	3	2
50	69.00			29	48.30	2	1
63	74.75			36	60.95	1	1
				42	69.00		
				48	74.75		

Type: ***02.12 22 09*** External dimensions: ***120 x 220 x 90 mm*** Weight: ***1060 g***

DIN rail length in mm	max. fitting length in mm	Mounting plate (thickness in mm)	External mounting brackets	External hinge* set	EMC version	Allen lid screws	Silicone lid seal	Sealable lid screws
TS 35								
205	183	1.5	•	•	•	•	•	•

Maximum number of cable glands to ***DIN 50262****

A C D B

M	Corner dim.	Side A/B	Side C/D	*PG*	Corner dim.	Side A/B	Side C/D
12	17.25	38	12	7	17.25	36	12
16	25.30	17	5	9	21.85	24	6
20	27.60	14	4	11	25.30	15	5
25	37.95	7	2	13.5	27.60	14	4
32	48.30	4	1	16	31.05	12	3
40	60.95	3	1	21	37.95	6	2
50	69.00			29	48.30	4	1
63	74.75			36	60.95	3	1
				42	69.00		
				48	74.75		

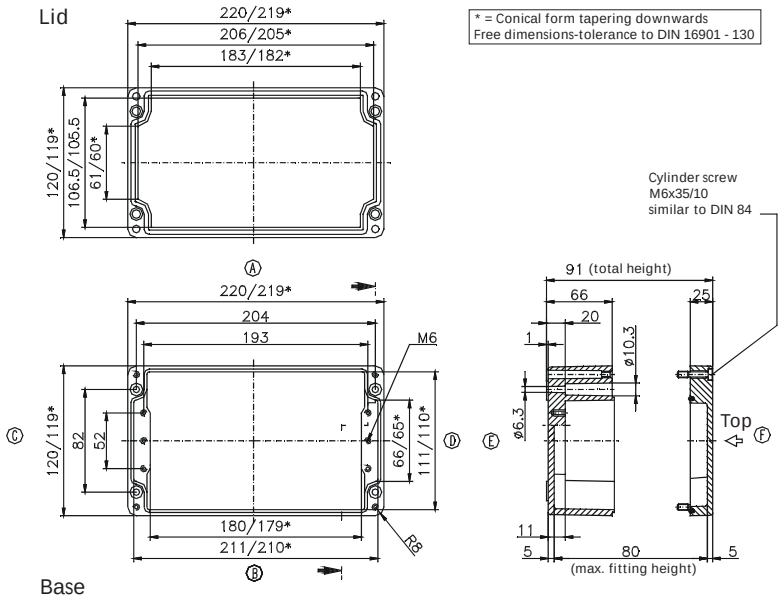

Type: ***02.16 16 09*** External dimensions: ***160 x 160 x 90 mm*** Weight: ***1290 g***

DIN rail length in mm	max. fitting length in mm	Mounting plate (thickness in mm)	External mounting brackets	External hinge* set	EMC version	Allen lid screws	Silicone lid seal	Sealable lid screws
TS 35								
144	122	1.5	•	•	•	•	•	•

Maximum number of cable glands to ***DIN 50262****

A C D B

M	Corner dim.	Side A/B	Side C/D	*PG*	Corner dim.	Side A/B	Side C/D
12	17.25	26	18	7	17.25	26	18
16	25.30	14	8	9	21.85	15	12
20	27.60	9	6	11	25.30	12	8
25	37.95	6	3	13.5	27.60	9	6
32	48.30	3	2	16	31.05	8	6
40	60.95	2	1	21	37.95	6	3
50	69.00	2	1	29	48.30	2	2
63	74.75			36	60.95	2	1
				42	69.00	1	
				48	74.75		

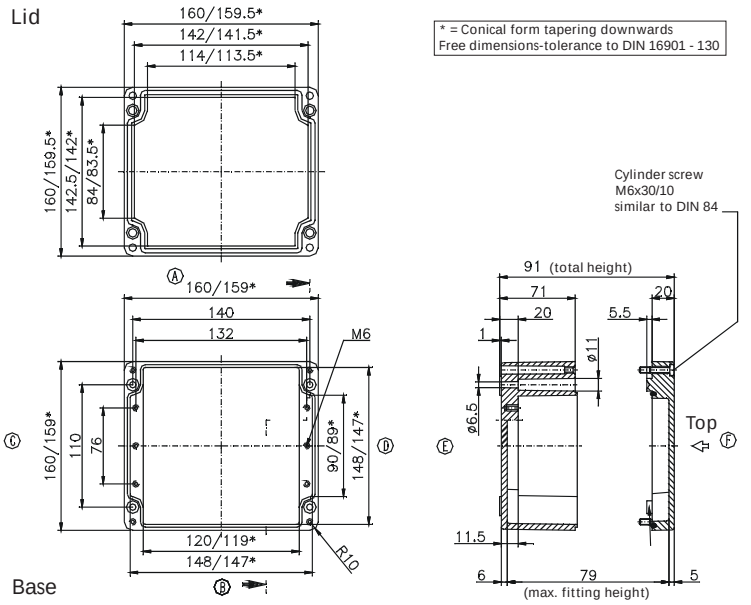

Type: ***02.16 26 09*** External dimensions: ***160 x 260 x 90 mm*** Weight: ***1710 g***

DIN rail length in mm	max. fitting length in mm	Mounting plate (thickness in mm)	External mounting brackets	External hinge* set	EMC version	Allen lid screws	Silicone lid seal	Sealable lid screws
TS 35								
245	222	1.5	•	•	•	•	•	•

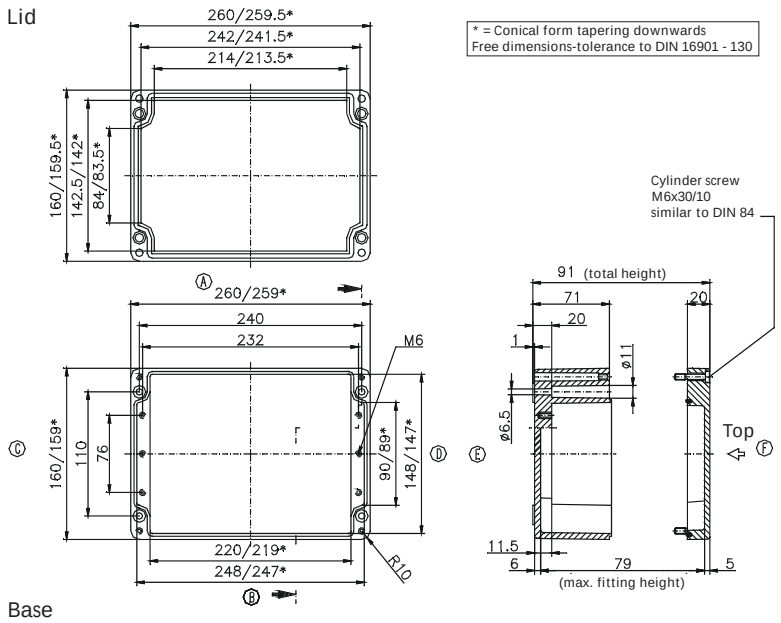

Maximum number of cable glands to ***DIN 50262****

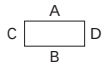

M	Corner dim.	Side A/B	Side C/D	***PG***	Corner dim.	Side A/B	Side C/D
12	17.25	50	16	7	17.25	50	15
16	25.30	26	8	9	21.85	30	11
20	27.60	17	6	11	25.30	21	6
25	37.95	11	3	13.5	27.60	17	6
32	48.30	5	2	16	31.05	14	5
40	60.95	3	1	21	37.95	11	3
50	69.00	3		29	48.30	5	2
63	74.75			36	60.95	3	1
				42	69.00	3	
				48	74.75		

Type: ***02.16 36 09*** External dimensions: ***160 x 360 x 90 mm*** Weight: ***2150 g***

DIN rail length in mm	max. fitting length in mm	Mounting plate (thickness in mm)	External mounting brackets	External hinge* set	EMC version	Allen lid screws	Silicone lid seal	Sealable lid screws
TS 35								
343	322	1.5	•	•	•	•	•	•

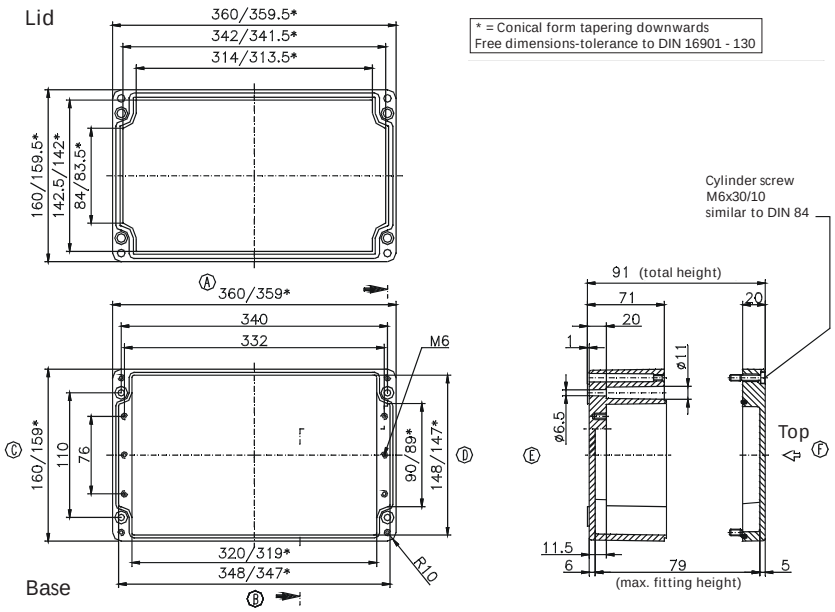

Maximum number of cable glands to ***DIN 50262****

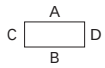

M	Corner dim.	Side A/B	Side C/D	***PG***	Corner dim.	Side A/B	Side C/D
12	17.25	72	18	7	17.25	72	18
16	25.30	38	8	9	21.85	42	12
20	27.60	26	6	11	25.30	36	8
25	37.95	16	3	13.5	27.60	26	6
32	48.30	7	2	16	31.05	20	6
40	60.95	5	1	21	37.95	16	3
50	69.00	4	1	29	48.30	7	2
63	74.75			36	60.95	5	1
				42	69.00	4	
				48	74.75		

Type: ***02.16 56 09*** External dimensions: ***160 x 560 x 90 mm*** Weight: ***3185 g***

DIN rail length in mm	max. fitting length in mm	Mounting plate (thickness in mm)	External mounting brackets	External hinge* set	EMC version	Allen lid screws	Silicone lid seal	Sealable lid screws
TS 35								
543	522	2	•	•	•	•	•	•

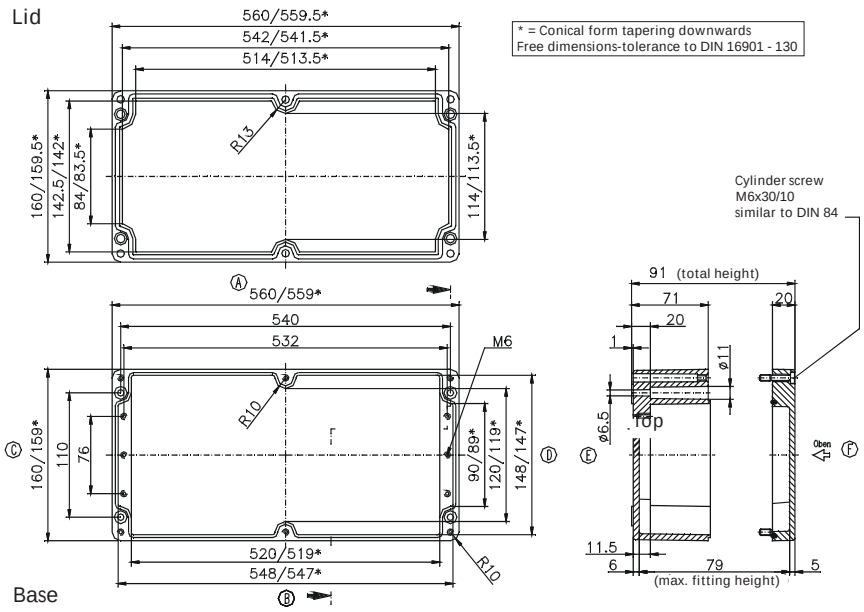

Maximum number of cable glands to ***DIN 50262****

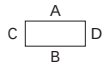

M	Corner dim.	Side A/B	Side C/D	*PG*	Corner dim.	Side A/B	Side C/D
12	17.25	112	18	7	17.25	112	18
16	25.30	58	8	9	21.85	66	12
20	27.60	40	6	11	25.30	52	8
25	37.95	24	3	13.5	27.60	40	6
32	48.30	12	2	16	31.05	32	6
40	60.95	8	1	21	37.95	22	3
50	69.00	6	1	29	48.30	10	2
63	74.75			36	60.95	8	1
				42	69.00	6	
				48	74.75		

Type: ***02.25 26 12*** External dimensions: ***250 x 255 x 120 mm*** Weight: ***2650 g***

DIN rail length in mm	max. fitting length in mm	Mounting plate (thickness in mm)	External mounting brackets	External hinge* set	EMC version	Allen lid screws	Silicone lid seal	Sealable lid screws
TS 35								
238	217	2	•	•	•	•	•	•

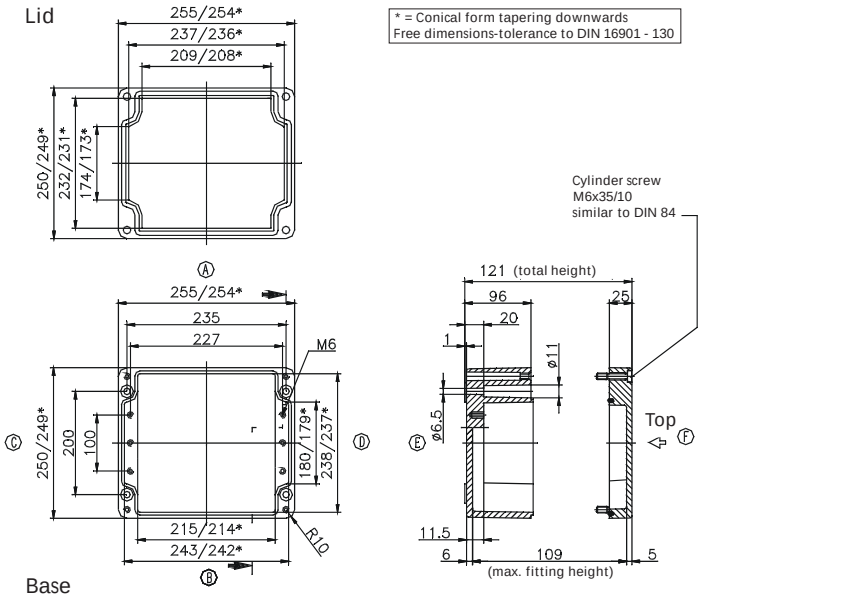

Maximum number of cable glands to ***DIN 50262****

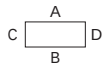

M	Corner dim.	Side A/B	Side C/D	*PG*	Corner dim.	Side A/B	Side C/D
12	17.25	69	51	7	17.25	69	51
16	25.30	32	24	9	21.85	40	32
20	27.60	24	18	11	25.30	32	24
25	37.95	12	10	13.5	27.60	24	18
32	48.30	8	7	16	31.05	21	17
40	60.95	4	3	21	37.95	12	9
50	69.00	3	3	29	48.30	8	6
63	74.75	3	2	36	60.95	4	3
				42	69.00	3	2
				48	74.75	3	2

Type: ***02.25 26 16*** External dimensions: ***250 x 255 x 160 mm*** Weight: ***3275 g***

DIN rail length in mm	max. fitting length in mm	Mounting plate (thickness in mm)	External mounting brackets	External hinge* set	EMC version	Allen lid screws	Silicone lid seal	Sealable lid screws
TS 35								
238	217	2	•	•	•	•	•	•

Maximum number of cable glands to ***DIN 50262****

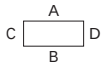

M	Corner dim.	Side A/B	Side C/D	***PG***	Corner dim.	Side A/B	Side C/D
12	17.25	69	51	7	17.25	69	51
16	25.30	32	24	9	21.85	40	32
20	27.60	24	18	11	25.30	32	24
25	37.95	12	10	13.5	27.60	24	18
32	48.30	8	7	16	31.05	21	17
40	60.95	4	3	21	37.95	12	9
50	69.00	3	3	29	48.30	8	6
63	74.75	3	2	36	60.95	4	3
				42	69.00	3	2
				48	74.75	3	2

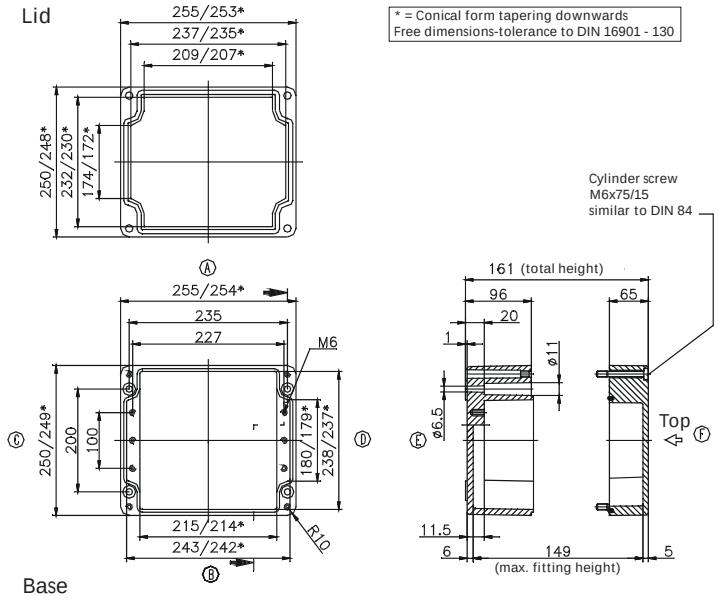

Type: ***02.25 40 12*** External dimensions: ***250 x 400 x 120 mm*** Weight: ***3650 g***

DIN rail length in mm	max. fitting length in mm	Mounting plate (thickness in mm)	External mounting brackets	External hinge* set	EMC version	Allen lid screws	Silicone lid seal	Sealable lid screws
TS 35								
381	362	2	•	•	•	•	•	•

Maximum number of cable glands to ***DIN 50262****

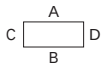

M	Corner dim.	Side A/B	Side C/D	***PG***	Corner dim.	Side A/B	Side C/D
12	17.25	117	50	7	17.25	114	50
16	25.30	56	22	9	21.85	68	32
20	27.60	42	18	11	25.30	56	21
25	37.95	21	10	13.5	27.60	40	18
32	48.30	14	6	16	31.05	33	17
40	60.95	7	3	21	37.95	21	9
50	69.00	5	2	29	48.30	14	5
63	74.75	5	2	36	60.95	7	3
				42	69.00	5	2
				48	74.75	5	2

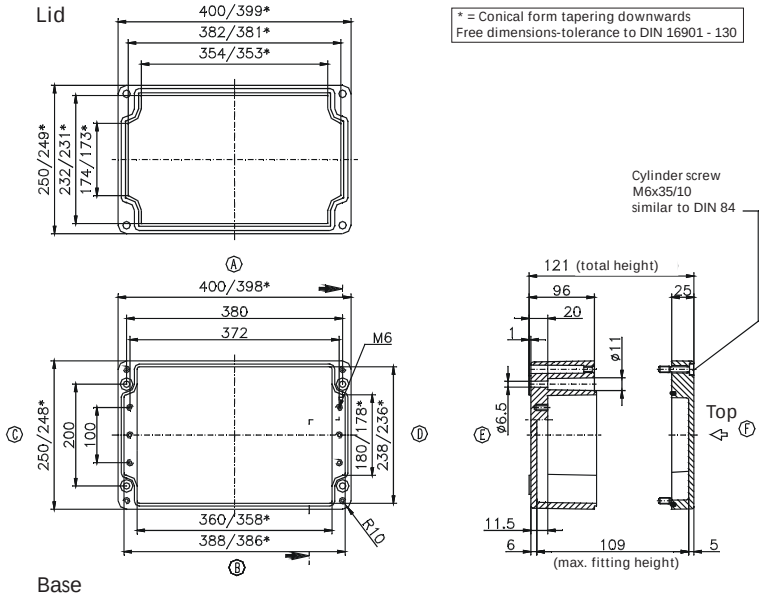

Type: ***02.25 40 16*** External dimensions: ***250 x 400 x 160 mm*** Weight: ***4800 g***

DIN rail length in mm	max. fitting length in mm	Mounting plate (thickness in mm)	External mounting brackets	External hinge* set	EMC version	Allen lid screws	Silicone lid seal	Sealable lid screws
TS 35								
381	362	2	•	•	•	•	•	•

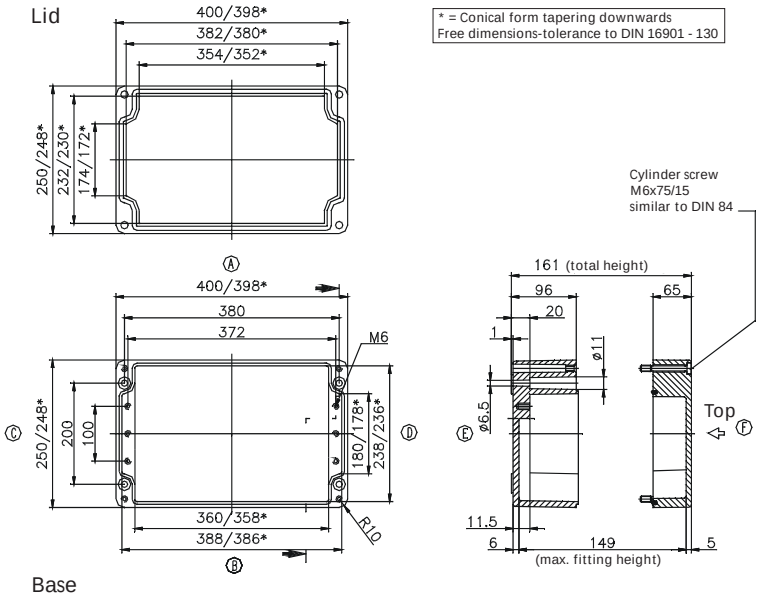

Maximum number of cable glands to ***DIN 50262****

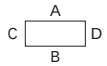

M	Corner dim.	Side A/B	Side C/D	*PG*	Corner dim.	Side A/B	Side C/D
12	17.25	117	50	7	17.25	114	50
16	25.30	56	24	9	21.85	68	32
20	27.60	42	18	11	25.30	56	22
25	37.95	21	10	13.5	27.60	40	18
32	48.30	14	7	16	31.05	33	17
40	60.95	7	3	21	37.95	21	9
50	69.00	5	3	29	48.30	14	6
63	74.75	5	2	36	60.95	7	3
				42	69.00	5	2
				48	74.75	5	2

Type: ***02.25 60 12*** External dimensions: ***250 x 600 x 120 mm*** Weight: ***5235 g***

DIN rail length in mm	max. fitting length in mm	Mounting plate (thickness in mm)	External mounting brackets	External hinge* set	EMC version	Allen lid screws	Silicone lid seal	Sealable lid screws
TS 35								
581	562	2	•	•	•	•	•	•

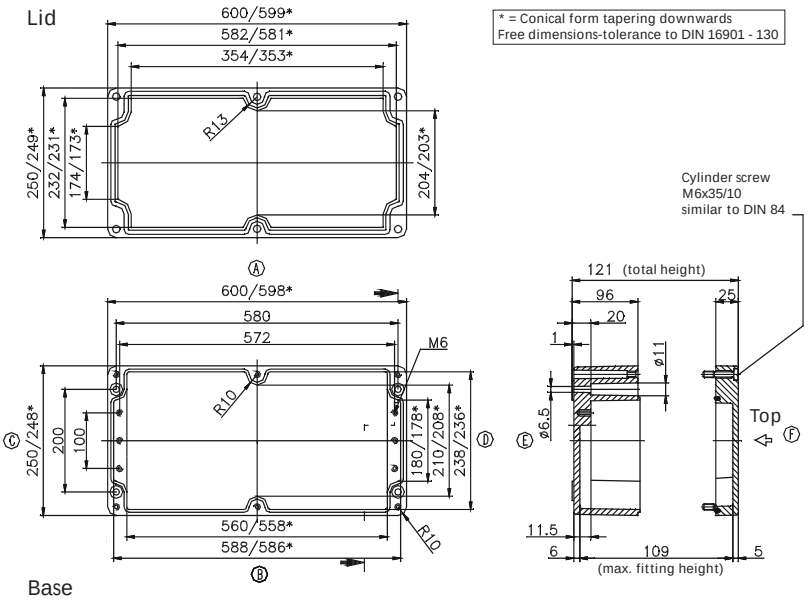

Maximum number of cable glands to ***DIN 50262****

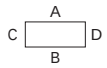

M	Corner dim.	Side A/B	Side C/D	*PG*	Corner dim.	Side A/B	Side C/D
12	17.25	174	50	7	17.25	174	50
16	25.30	84	24	9	21.85	100	32
20	27.60	60	18	11	25.30	80	22
25	37.95	30	10	13.5	27.60	60	18
32	48.30	20	7	16	31.05	48	17
40	60.95	10	3	21	37.95	30	9
50	69.00	8	3	29	48.30	20	6
63	74.75	6	2	36	60.95	10	3
				42	69.00	8	2
				48	74.75	6	2

Type: ***02.36 36 09*** External dimensions: ***360 x 360 x 90 mm*** Weight: ***3670 g***

DIN rail length in mm	max. fitting length in mm	Mounting plate (thickness in mm)	External mounting brackets	External hinge* set	EMC version	Allen lid screws	Silicone lid seal	Sealable lid screws
TS 35								
343	320	2	•	•	•	•	•	•

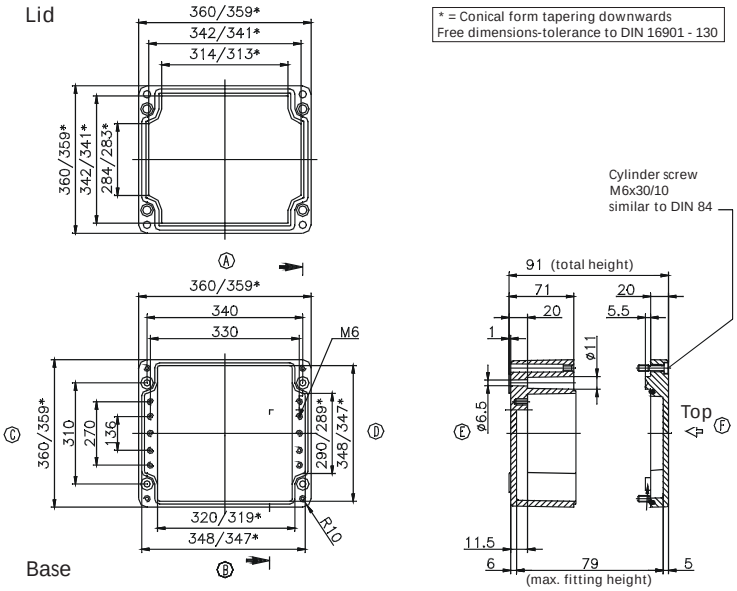

Maximum number of cable glands to ***DIN 50262****

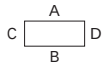

M	Corner dim.	Side A/B	Side C/D	***PG***	Corner dim.	Side A/B	Side C/D
12	17.25	72	52	7	17.25	72	52
16	25.30	38	24	9	21.85	42	38
20	27.60	26	20	11	25.30	33	23
25	37.95	16	10	13.5	27.60	26	20
32	48.30	7	6	16	31.05	20	18
40	60.95	5	5	21	37.95	15	9
50	69.00	4		29	48.30	7	6
63	74.75			36	60.95	5	4
				42	69.00	4	
				48	74.75		

Type: ***02.41 40 12*** External dimensions: ***405 x 400 x 120 mm*** Weight: ***5580 g***

DIN rail length in mm	max. fitting length in mm	Mounting plate (thickness in mm)	External mounting brackets	External hinge* set	EMC version	Allen lid screws	Silicone lid seal	Sealable lid screws
TS 35								
381	362	2	•	•	•	•	•	•

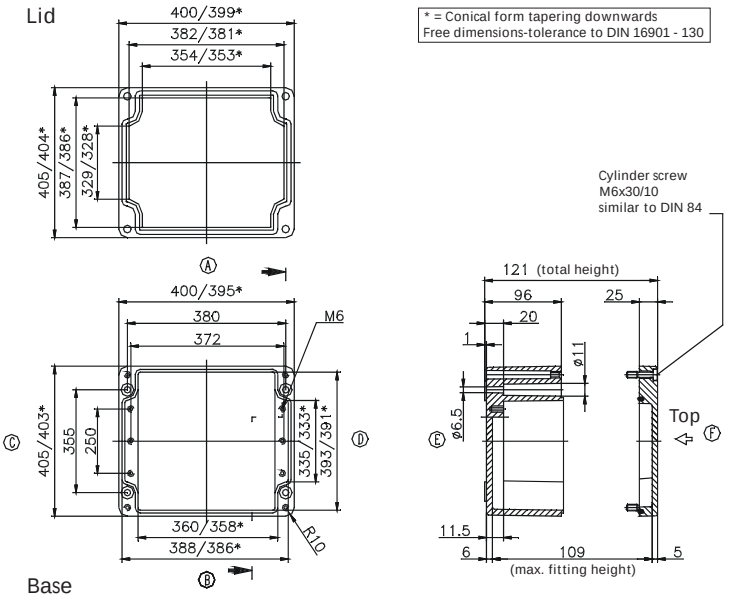

Maximum number of cable glands to ***DIN 50262****

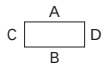

M	Corner dim.	Side A/B	Side C/D	***PG***	Corner dim.	Side A/B	Side C/D
12	17.25	117	95	7	17.25	114	95
16	25.30	56	46	9	21.85	68	60
20	27.60	42	36	11	25.30	56	44
25	37.95	21	18	13.5	27.60	40	36
32	48.30	14	13	16	31.05	33	32
40	60.95	7	6	21	37.95	21	18
50	69.00	5	5	29	48.30	14	12
63	74.75	5	4	36	60.95	7	6
				42	69.00	5	5
				48	74.75	5	4

Type: ***02.41 40 20*** External dimensions: ***405 x 400 x 200 mm*** Weight: ***5580 g***

DIN rail length in mm	max. fitting length in mm	Mounting plate (thickness in mm)	External mounting brackets	External hinge* set	EMC version	Allen lid screws	Silicone lid seal	Sealable lid screws
TS 35								
381	362	2	•	•	•	•	•	•

Maximum number of cable glands to ***DIN 50262****

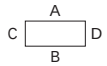
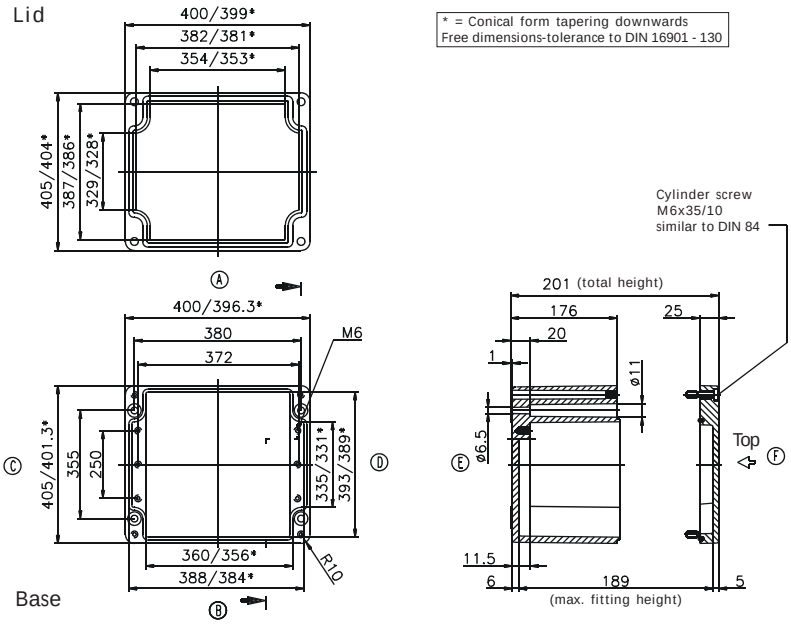
M	Corner dim.	Side A/B	Side C/D	***PG***	Corner dim.	Side A/B	Side C/D
12	17.25	117	95	7	17.25	114	95
16	25.30	56	46	9	21.85	68	60
20	27.60	42	36	11	25.30	56	44
25	37.95	21	18	13.5	27.60	40	36
32	48.30	14	13	16	31.05	33	32
40	60.95	7	6	21	37.95	21	18
50	69.00	5	5	29	48.30	14	12
63	74.75	5	4	36	60.95	7	6
				42	69.00	5	5
				48	74.75	5	4