Green Innovators of Innovation

www.lsis.biz

LSIS Electric Products

MCB / MC&TOR / MMS / MCCB / ACB / FDB / SMDB / VCB

LS IS

Miniature Circuit Breakers ..... Page 4

- 1, 2, 3 and 4 pole series up to 125AF
- B, C and D Characteristics

Residual Current Circuit Break ..... Page 6

- 2 and 4 pole series up to 100AF
- Sensitivity up to 300mA
- Overcurrent protection type available

Surge Protective Device ..... Page 8

Contactors & Overload Relays ..... Page 12

Metasol series

- 3 and 4 pole series up to 800AF Mini-contactors available
- AC/DC common use coil from 100AF
- Thermal (Bimetallic) and electronic type overload relays are available
- CE marked and UL approved

Mini contactors ..... Page 20

Digital motor protection relay ..... Page 21

Manual Motor Starters ..... Page 22

Molded Case Circuit Breakers ..... Page 24

Susol/Metasol series

- 2, 3 and 4 pole series up to 1600AF
- Rated ambient temperature at 40˚C calibrated for 50˚C available
- CE marked according to IEC standard and UL approved MCCBs are also available.

Earth Leakage Circuit Breakers ..... Page 32

Metasol series

- 2, 3 and 4 pole series up to 800AF
- CE marked according to IEC standard

Air Circuit Breakers ..... Page 36

Susol/Metasol series

- 65, 85 and 150kA breaking capacity
- High functional digital trip relays
- CE marked and Marine classification

LS Final Distribution Boards ..... Page 42

LS SMDB Solution ..... Page 46

Vacuum Circuit Breakers ..... Page 50

Susol series

Miniature circuit breakers

1, 2, 3 and 4 pole series up to 125AF

Type		MCB			
		BKN	BKN-c	BKN-b	
Protection		Overload and short circuit		Overload and short circuit	
Rated current		1, 2, 3, 4, 6, 10, 16, 20, 25, 32, 40, 50, 63A		1, 2, 3, 4, 6, 10, 16, 20, 25, 32, 40, 50, 63A	
Characteristic		B, C, D curve		B, C, D curve	
Poles		1p, 1p+N, 2p, 3p, 3p+N, 4p		1p, 1p+N, 2p, 3p, 3p+N, 4p	
Breaking capacity		1pole	2~4pole	1pole	2~4pole
	1A	6kA at 230/400VAC	6kA at 400VAC	10kA at 230/400VAC	10kA at 400VAC
	2A				
	3A				
	4A				
	6A				
	10A				
	16A				
	20A				
	25A				
	32A				
	40A				
	50A				
	63A				
	80A				
	100A				
	125A				
Standard		IEC 60898/60947-2		IEC 60898/60947-2	
Type of trip		Thermal magnetic release		Thermal magnetic release	
Electrical endurance		6000 operations		8000 operations	
Mount		On 35mm DIN rail		On 35mm DIN rail	
Width		17.8mm per pole		17.8mm per pole	
Terminal		Lug type(cable up to 25mm²)	Dual type(Lug & Screw)	Lug type(cable up to 25mm²)	
Auxiliary switch, AX Optional		 **1 changeover contact** 6A at 240VAC, 3A at 415VAC(AX) 6A at 230VAC, 3A at 415VAC(AL) 2A at 48VDC, 1A at 125VDC **Lug terminal** Cable capacity 2.5mm² **9mm wide**		 **1 changeover contact** 6A at 240VAC, 3A at 415VAC(AX/AL) 6A at 24VDC, 2A at 48VDC, 1A at 130VDC **Lug terminal** cable capacity 0.75~2.5㎟ **8.8mm wide**	
Dimension		See drawing 1		See drawing 2	
Characteristic curve		See curve 1		See curve 1	

Drawing 1 : Type BKN & BKN-c

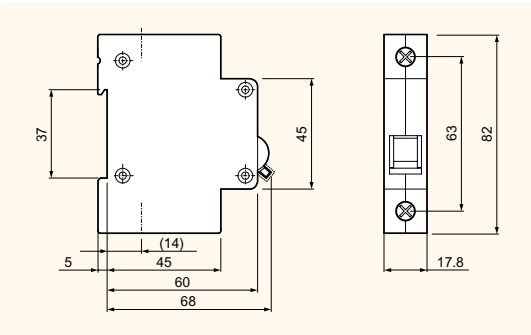

Drawing 2 : Type BKN-b

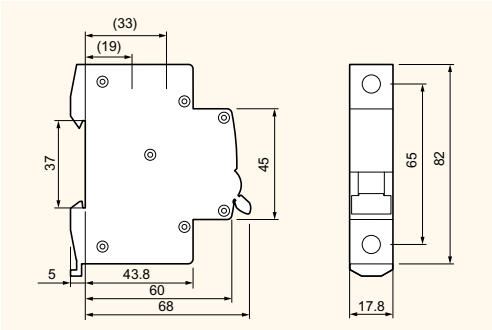

Drawing 3 : Type BKH

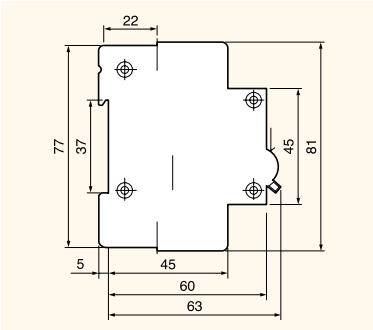

MCB			
BKH		BKP	BFN
Overload and short circuit		Overload and short circuit	Overload and short circuit
63, 80, 100A, 125A		3, 6, 10, 16, 20, 25, 32A	5, 10, 15, 20, 30, 40, 50A
C, D curve		B, C, D curve	1P, 2P, 3P
1p, 2p, 3p, 3p+N, 4p		1p+N	1P, 2P, 3P
1pole	2~4pole		
		4.5kA at 230VAC	
			10kA at 220/240VAC
10kA at 230/400VAC	10kA at 400VAC		
IEC 60947-2		IEC 60898	IEC 60947-2
Thermal magnetic release		Thermal magnetic release	Thermal magnetic release
6000 operations		20000 operations	10000 operations
On 35mm DIN rail		On 35mm DIN rail	Plug-in
27mm per pole		17.8mm per pole	25mm per pole
Lug type(cable up to 50mm^2)		Lug type(cable up to 10mm^2)	Lug type (14-6 AWG.)
See drawing 3		See drawing 4	See drawing 5
See curve 1		See curve 1	See curve 2

Curve 1 : Type BKN, BKN-b, BKN-c, BKH, BKP, RKP, RKS

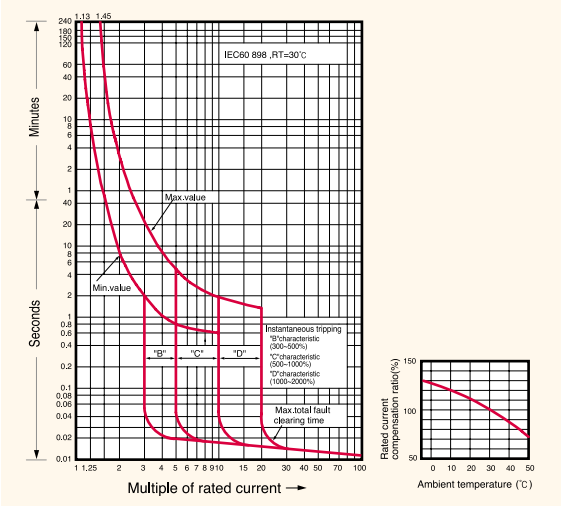

Curve 2 : Type BFN

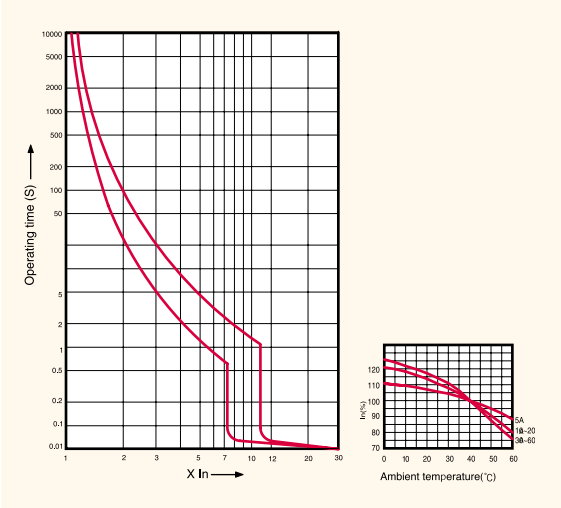

Drawing 4 : Type BKP

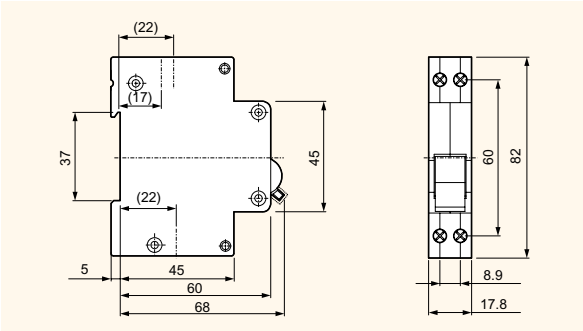

Drawing 5 : Type BFN

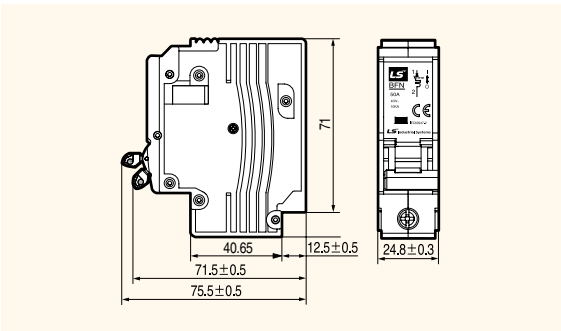

Residual current circuit breakers

2 and 4 pole series up to 63AF

Type	RCBO						
	RKP	RKS	RKS-b	32KGRc	32KGRd	32GRhc	32GRhd
Protection	Ground fault and overcurrent	Ground fault and overcurrent		Ground fault and overcurrent		Ground fault and overcurrent	
Rated current, In	3(C,D),6,10,16,20,25,32A (B,C,D curve)	6, 10, 16, 20, 25, 32A (B, C curve)		15, 20, 30A		15, 20, 30A	
Rated residual current							
Operating, I△n	30, 100, 300mA(non-adjustable)	30, 100mA(non-adjustable)		15, 30mA(non-adjustable)		15, 30mA(non-adjustable)	
Non-operating, I△no	0.5I△n	0.5I△n		0.5I△n		0.5I△n	
Number of poles	1P+N	1P+N		2 pole		2 pole	
Rated voltage	230VAC	230VAC		110/220VAC		110/220VAC	
Residual current off-time	≤0.1 sec.	≤0.3 sec.		≤0.03 sec.		≤0.03 sec.	
Standard	IEC 61009	IEC 61009		KS		KS	
Type of trip							
Ground fault	Electronic	Electronic		Electronic		Electronic	
Overcurrent	Thermal-magnetic	Thermal-magnetic		Bimetallic		Bimetallic	
Breaking capacity	4.5kA	10kA		1.5kA	2.5kA	1.5kA	2.5kA
Conditional short circuit capacity	-	-		-		-	
Electrical endurance	20000 operations	≤ 4000 operations		6000 operations		6000 operations	
Mount	On 35mm DIN rail	On 35mm DIN rail		On 35mm DIN rail / Screw		On 35mm DIN rail / Screw	
Width	35.6mm	18mm		35mm		33mm	
Terminal	Lug type (cable up to 10mm²)	Lug type (cable up to 10mm²)		Screw clamp type (cable up to 5.5mm²)		Screw clamp type (cable up to 5.5mm²)	
Type of operation	-	-		-		-	
Dimension	See drawing 1	See drawing 2	See drawing 3	See drawing 4		See drawing 5	
Characteristic curve	See page 5(Curve 1)	See page 5(Curve 1)		Curve 3		Curve 4	

Drawing 1: Type RKP

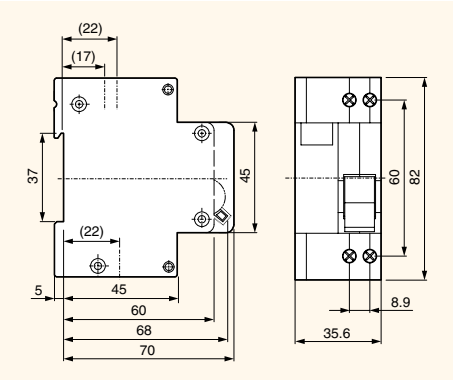

Drawing 2: Type RKS

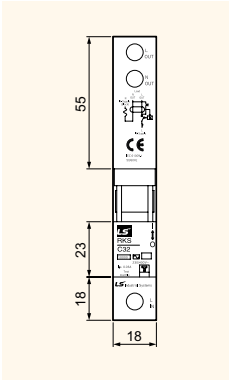

Drawing 3: Type RKS-b

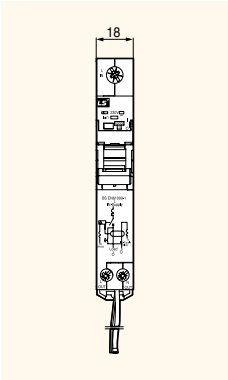

Drawing 4: Type 32KGRc & 32KGRd

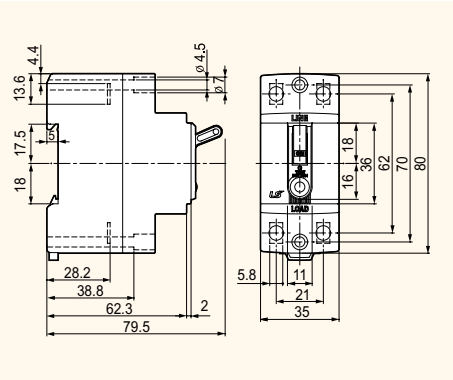

Drawing 5: Type 32GRhc & 32GRhd

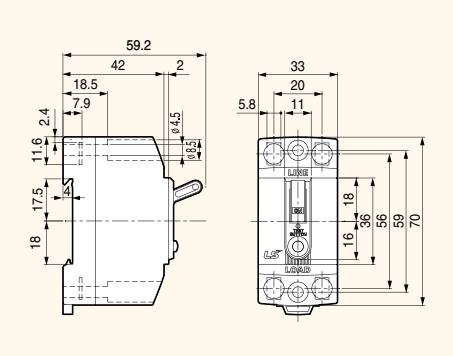

Drawing 6: Type RKN

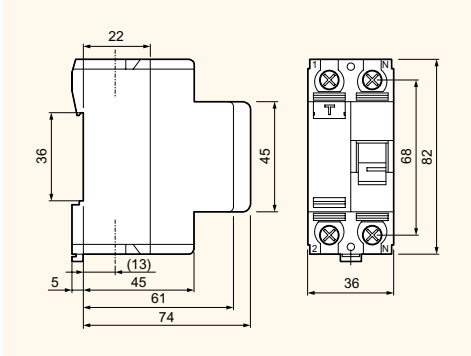

Drawing 7: Type RKN-b

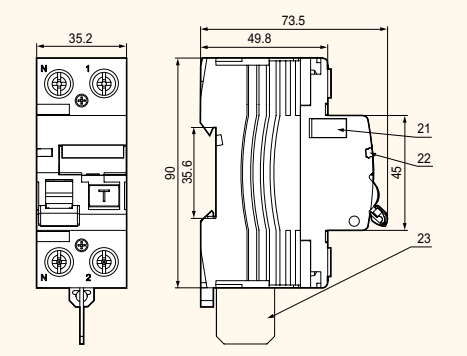

RCCB	
RKN	**RKN-b**
Ground fault	
25, 32, 40, 63A	25, 32, 40, 63, 80, 100A
30, 100, 300mA(non-adjustable)	
0.5I△n	
1P+N, 3P+N	
230VAC(1P+N), 230/415VAC(3P+N)	
≤0.1 sec.	
IEC 61008	
Electro-magnetic	
N.A	
-	
6kA	10kA
6000 operations	
On 35mm DIN rail	
18mm	
Lug type (cable up to 35mm²)	
A/AC	
See drawing 6	See drawing 7
-	

Isolator		
Type		**BKD**
Rated current, In		40, 50, 63, 80, 100, 125A
Number of poles		1p, 2p, 3p, 4p
Rated voltage		240/415VAC
Standard		IEC 60947-3
Electrical endurance	40, 50, 63A	20000 operations
	80, 100, 125A	10000 operations
Mount		On 35mm DIN rail
Width		17.8mm per pole
Terminal		Lug type(cable up to 50㎟)
Dimension		See drawing 8

Drawing 8: Type BKD

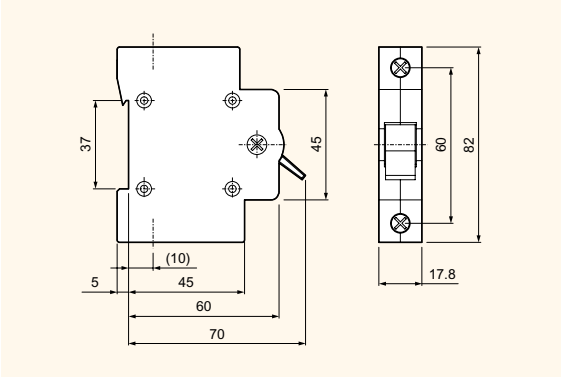

Curve 3 : Type 32KGRc, 32KGRd

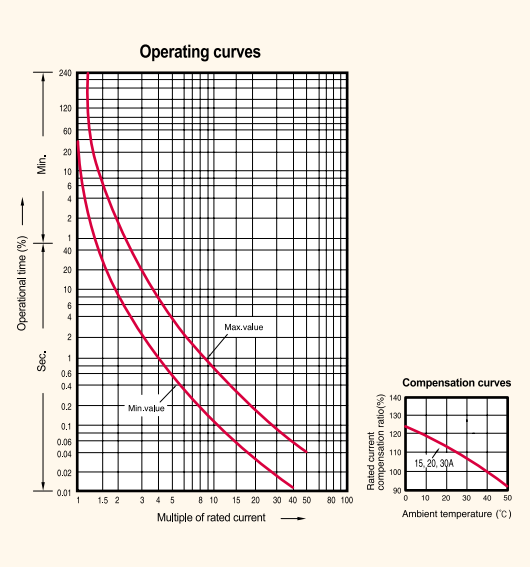

Curve 4 : Type 32GRhc, 32GRhd

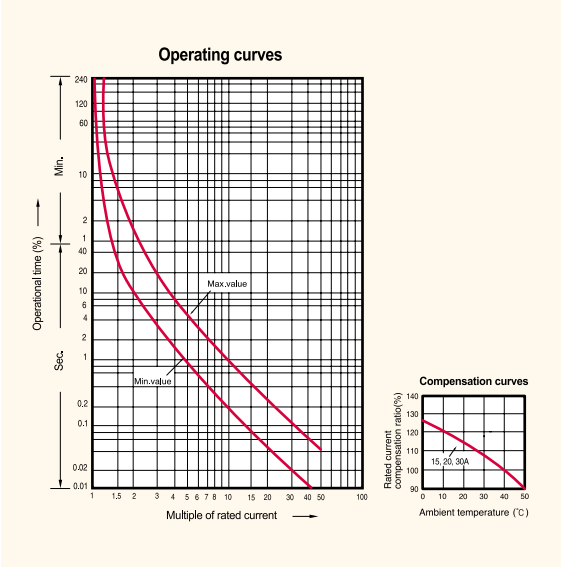

Surge Protective Device

BKS Series

Din-rail type

Product description

The BKS surge protective device is applied to the alternating current 50/60Hz, 220V/380V power system and provides the protection from the surge overvoltage of an electric system.
Moreover, it is the protection element (MOV) replacement type and is the product with convenience and economic efficiency.
However, only the protection module is provided so that separate components have to be combined according to the site conditions.
If the protective device is normal, the display becomes green. The display becomes red after operation (abnormal or after an accident).

Product rating

Type	*BKS-A*	*BKS-B*	*BKS-C*	*BKS-D*	*BKS-E*
Pole	1, 2, 3, 4 Pole				
Rated system voltage Un (Applied Voltage)	AC 220V	AC 220V	AC 220V	AC 380V	AC 380V
Maximum continuous operating voltage Uc (MCOV, The voltage applied to the surge protective device)	AC 320	AC 320V	AC 320V	AC 420V	AC 460V
Voltage protection level Up (The voltage level with the surge suppressed)	1.0kA	1.2kA	1.5kA	2.0kA	2.3kA
Maximum discharge current Imax(8/20㎲) kA	10kA	20kA	40kA	60kA	70kA
Response time ns	< 25 ns				
Usable ambient temperature ℃	-40 ~ +80℃				
Usable frequency Hz	50/60 Hz				
Attachment type	DIN-rail attachment type				
Operation status indication window	Normal operation: Green, Abnormal/After an accident: Red				
Product color and shape					
Min. terminal connection (mm²)	1 Phase and Neutral 2.5, Earth 4				
Protection class	ClassⅢ		Class Ⅱ		
Alarm Contact	No	No	No	No	No

* The surge protective device starts to operate above the maximum continuous operating voltage Uc (MCOV).

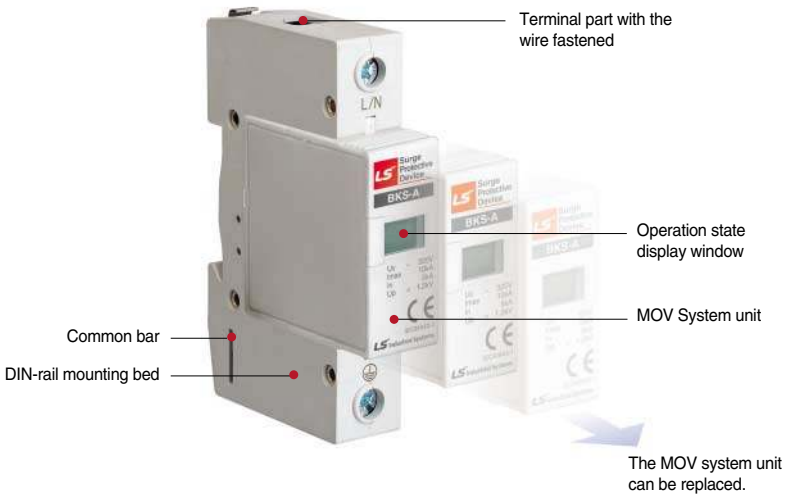

Drawing

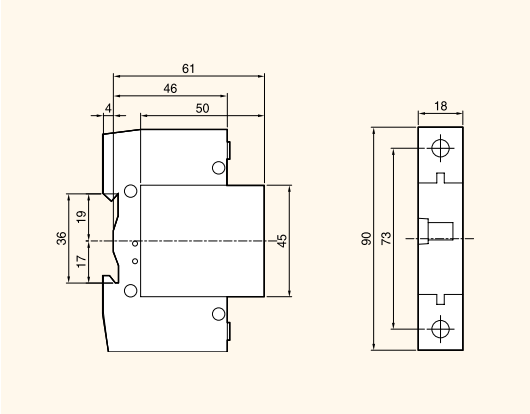

SP Series

Box type

The SP series surge protective device is applied to the alternating current 50/60Hz, 220V/380V power system and provides the protection from the surge overvoltage of an electric system.
Moreover, the protection module, disconnectable device (fuse), and fastened power and ground wires are organized into the all-in-one steel cabinet with convenient installation and stability.
If the protective device is normal, the display becomes green. The display becomes red after operation (abnormal or after an accident).

Product rating-Single phase 2W+G (SPL)

Type	*SPL-110S 20kA*	*SPL-220S 40kA*	*SPL-220S 80kA*
Pole	2W+G	2W+G	2W+G
Rated system voltage Un (Applied Voltage)	AC 110V/220V	AC 220V	AC 220V
Maximum continuous operating voltage Uc (MCOV, The voltage applied to the surge protective device)	AC 320V	AC 320V	AC 320V
Voltage protection level Up (The voltage level with the surge suppressed)	1.5kV	1.5kV	1.5kV
Maximum discharge current Imax(8/20㎲) kA	20kA	40kA	80kA
Response time ns	< 5 ns		
Usable ambient temperature ℃	-40 ~ +70℃		
Usable frequency Hz	50/60 Hz		
Attachment type	Screw attachment type		
Operation status indication window	Normal operation: Green LED lighting, Abnormal/After an accident: Red lighting		
Dimension(W × H × D)	60 × 87 × 47	68 × 90 × 70	95 × 117 × 68
Product color and shape			
Protection class	ClassⅢ	ClassⅡ/ ClassⅢ	ClassⅡ/ ClassⅢ

Surge Protective Device

SP Series

Box type

Product rating-Three phase 3W+G (SPT) AC 380V

Type	SPT-380S 40kA	SPT-380S 80kA	SPT-380S 120kA	SPT-380S 160kA
Pole	3W+G	3W+G	3W+G	3W+G
Rated system voltage Un (Applied Voltage)	AC 380V	AC 380V	AC 380V	AC 380V
Maximum continuous operating voltage Uc (MCOV, The voltage applied to the surge protective device)	AC 320V	AC 320V	AC 320V	AC 320V
Voltage protection level Up (The voltage level with the surge suppressed)	2.0kV	2.0kV	2.0kV	2.0kV
Maximum discharge current Imax(8/20㎲) kA	40kA	80kA	120kA	160kA
Response time ns	< 5 ns			
Usable ambient temperature ℃	-40 ~ +70℃			
Usable frequency Hz	50/60 Hz			
Attachment type	Screw attachment type			
Operation status indication window	Normal operation: Green LED lighting, Abnormal/After an accident: Red lighting			
Dimension(W × H × D)	113 × 160 × 80	130 × 160 × 80	160 × 190 × 86	160 × 190 × 86
Product color and shape				
Protection class	Class Ⅱ / Class Ⅲ		Class Ⅰ / Class Ⅱ / Class Ⅲ	

Product rating-Three phase 3W+G (SPT) AC 440V

Type	SPT-440S 40kA	SPT-440S 80kA	SPT-440S 120kA	SPT-440S 160kA
Pole	3W+G	3W+G	3W+G	3W+G
Rated system voltage Un (Applied Voltage)	AC 440V	AC 440V	AC 440V	AC 440V
Maximum continuous operating voltage Uc (MCOV, The voltage applied to the surge protective device)	AC 320V	AC 320V	AC 320V	AC 320V
Voltage protection level Up (The voltage level with the surge suppressed)	2.0kV	2.0kV	2.0kV	2.0kV
Maximum discharge current Imax(8/20㎲) kA	40kA	80kA	120kA	160kA
Response time ns	< 5 ns			
Usable ambient temperature ℃	-40 ~ +70℃			
Usable frequency Hz	50/60 Hz			
Attachment type	Screw attachment type			
Operation status indication window	Normal operation: Green LED lighting, Abnormal/After an accident: Red lighting			
Dimension(W × H × D)	113 × 160 × 80	130 × 160 × 80	160 × 190 × 86	160 × 190 × 86
Product color and shape				
Protection class	Class Ⅱ / Class Ⅲ		Class Ⅰ / Class Ⅱ / Class Ⅲ	

Product rating-Three phase 4W+G (SPY)

Type	*SPY-220S 40kA*	*SPY-220S 80kA*	*SPY-220S 120kA*	*SPY-220S 160, 200, 240kA*
Pole	4W+G	4W+G	4W+G	4W+G
Rated system voltage Un (Applied Voltage)	AC 220/380V	AC 220/380V	AC 220/380V	AC 220/380V
Maximum continuous operating voltage Uc (MCOV, The voltage applied to the surge protective device)	AC 320V	AC 320V	AC 320V	AC 320V
Voltage protection level Up (The voltage level with the surge suppressed)	2.0kV	2.0kV	2.0kV	2.0kV
Maximum discharge current Imax(8/20㎲) kA	40kA	80kA	120kA	160, 200, 240kA
Response time ns	< 5 ns			
Usable ambient temperature ℃	-40 ~ +70℃			
Usable frequency Hz	50/60 Hz			
Attachment type	Screw attachment type			
Operation status indication window	Normal operation: Green LED lighting, Abnormal/After an accident: Red lighting			
Dimension(W × H × D)	130 × 160 × 80	130 × 160 × 80	160 × 190 × 86	160 × 190 × 86
Product color and shape				
Protection class	Class Ⅱ / Class Ⅲ		Class Ⅰ / Class Ⅱ / Class Ⅲ	

Contactors & Overload relays

Metasol MC 3P 18 to 100A

MC type
Magnetic Contactors

Frame size				18AF				22AF			
Type				MC-6a	MC-9a	MC-12a	MC-18a	MC-9b	MC-12b	MC-18b	MC-22b*
	screws clamp terminals			●	●	●	●	●	●	●	●
Number of poles				3pole				3pole			
Rated operational voltage, Ue				690V				690V			
Rated insulation voltage, Ui				690V				690V			
Rated frequency				50/60Hz				50/60Hz			
Rated impulse withstand voltage, Uimp				6kV				6kV			
Maximum operating rate in operating cycles per hour(AC3)				1800 operations per hour				1800 operations per hour			
Durability	Mechanical			15 mil. operations				15 mil. operations			
	Electrical			2.5 mil. operations				2.5 mil. operations			
Current and power	AC-1, Thermal current		A	25	25	25	32	25	25	32	40
	AC-3	200/240V	kW	2.2	2.5	3.5	4.5	2.5	3.5	4.5	5.5
			A	9	11	13	18	11	13	18	22
		380/440V	kW	3	4	5.5	7.5	4	5.5	7.5	11
			A	7	9	12	18	9	12	18	22
		500/550V	kW	3	4	7.5	7.5	4	7.5	7.5	15
			A	6	7	12	13	7	12	13	20
		690V	kW	3	4	7.5	7.5	4	7.5	7.5	15
			A	4	5	9	9	6	9	9	18
UL rating (50/60Hz)	Continuous current		A	25	25	25	32	25	25	40	40
	Single phase	110~120V	HP	0.5	0.5	0.75	1	0.5	0.75	1	2
		220~240V	HP	1.5	1.5	2	3	1.5	2	3	3
	Three phase	200~208V	HP	2	2	3	5	2	3	5	7.5
		220~240V	HP	3	3	5	7.5	3	5	7.5	10
		440~480V	HP	5	5	7.5	10	5	7.5	10	15
		550~600V	HP	7.5	7.5	10	15	7.5	10	15	20
	NEMA size			00	00	0	0	00	00	0	1
Size and weight	AC control	Weight	kg	0.33				0.34			
		Size(W×H×D)	mm	45×73.5×80.4				45×73.5×87.4			
	DC control	Weight	kg	0.5				0.51			
		Size(W×H×D)	mm	45×73.5×110.7				45×73.5×117.7			
Auxiliary(standard)				1a or 1b				1a1b			
Auxiliary	Side mount			UA-1				UA-1			
	Front mount			UA-2, UA-4				UA-2, UA-4			

Note) Minimum conduct current of Auxiliary contactor is DC 17V 5mA.

MT type
Thermal Overload Relays

Type			MT-12/□	MT-32/□
	Screws clamp terminals		●	●
Rated operational voltage, Ue			690V	690V
Rated insulation voltage, Ui			690V	690V
Rated impulse withstand voltage, Uimp			6kV	6kV
Trip class			10A, 20	10A, 20
Setting range			0.1~18A	0.1~40A
Size and weight	Weight	kg	0.1	0.17
	Size(W×H×D)	mm	45×73.2×63.7	45×75×90

* The safety cover of magnetic contactor and thermal overload relay is optional.

40AF		65AF		100AF		
MC-32a	MC-40a	MC-50a	MC-65a	MC-75a	MC-85a	MC-100a
●	●	●	●	●	●	●
3pole		3pole		3pole		
690V		690V		690V		
1000V		1000V		1000V		
50/60Hz		50/60Hz		50/60Hz		
8kV		8kV		8kV		
1800 operations per hour		1800 operations per hour		1800 operations per hour		
12 mil. operations		12 mil. operations		12 mil. operations		
2 mil. operations		2 mil. operations		2 mil. operations		
50	60	70	100	110	135	160
7.5	11	15	18.5	22	25	30
32	40	55	65	75	85	105
15	18.5	22	30	37	45	55
32	40	50	65	75	85	105
18.5	22	30	33	37	45	55
28	32	43	60	64	75	85
18.5	22	30	33	37	45	55
20	23	28	35	42	45	65
50	60	70	100	110	135	160
2	3	3	5	5	7.5	10
5	7.5	10	15	15	15	20
7.5	15	20	25	25	30	30
10	15	25	30	30	40	40
20	30	40	50	50	60	75
25	30	50	60	60	75	75
1	1	2	2	2	3	3
0.4		0.9		1.6		
45×83×90		55×106×119		70×140×135.8		
0.6		1.2		2.6		
45×83×117.1		55×106×146.4		70×140×172.3		
UA-1		UA-1		UA-1		
UA-2, UA-4		UA-2, UA-4		UA-2, UA-4		

MT-32/□	MT-63/□	MT-95/□
●	●	●
690V	690V	690V
690V	690V	690V
6kV	6kV	6kV
10A, 20	10A, 20	10A, 20
0.1~40A	4~65A	7~100A
0.17	0.31/0.33	0.48/0.5
45×75×90	55×81×100	70×97×110

Contactors & Overload relays

Metasol MC 3P 150 to 800A

MC type
Magnetic Contactors

Frame size				150AF		225AF	
Type				MC-130a	MC-150a	MC-185a	MC-225a
	screws clamp terminals			●	●	●	●
Number of poles				3pole		3pole	
Rated operational voltage, Ue				690V		690V	
Rated insulation voltage, Ui				1000V		1000V	
Rated frequency				50/60Hz		50/60Hz	
Rated impulse withstand voltage, Uimp				8kV		8kV	
Maximum operating rate in operating cycles per hour(AC3)				1200 operations per hour		1200 operations per hour	
Durability	Mechanical			5 mil. operations		5 mil. operations	
	Electrical			1 mil. operations		1 mil. operations	
Current and power	AC-1, Thermal current		A	160	210	230	275
	AC-3	200/240V	kW	37	45	55	75
			A	130	150	185	225
		380/440V	kW	60	75	90	132
			A	130	150	185	225
		500/550V	kW	60	70	110	132
			A	90	100	180	200
		690V	kW	55	55	110	140
			A	60	60	120	150
UL rating (50/60Hz)	Continuous current		A	160	210	230	275
	Single phase	110~120V	HP	10	15	15	15
		220~240V	HP	20	25	30	40
	Three phase	200~208V	HP	40	40	60	60
		220~240V	HP	40	50	60	75
		440~480V	HP	75	100	125	150
		550~600V	HP	75	75	125	150
	NEMA size			3	4	4	4
Size and weight	AC control	Weight	kg	2.4		5.4	
		Size(W×H×D)	mm	95×158×132		138×203×181	
	DC control	Weight	kg	2.3			
		Size(W×H×D)	mm	95×158×132			
Auxiliary(standard)						2a2b	
Auxiliary	Side mount			UA-1		AU-100 (Max.4NO4NC)	
	Front mount			UA-2, UA-4		-	

MT type
Thermal Overload Relays

Type				MT-150/□	MT-225/□
	Screws clamp terminals			●	●
Rated operational voltage, Ue				690V	690V
Rated insulation voltage, Ui				690V	690V
Rated impulse withstand voltage, Uimp				6kV	6kV
Trip class				10A, 20	10A, 20
Setting range				34~150A	65~240A
Size and weight		Weight	kg	0.67	2.5
		Size(W×H×D)	mm	95×109×113	147×141×184

* The safety cover of magnetic contactor and thermal overload relay is optional.

400AF			800AF		
MC-265a	MC-330a	MC-400a	MC-500a	MC-630a	MC-800a
●	●	●	●	●	●
3pole			3pole		
690V			690V		
1000V			1000V		
50/60Hz			50/60Hz		
8kV			8kV		
1200 operations per hour			1200 operations per hour		
5 mil. operations		2.5 mil. operations	2.5 mil. operations		
1 mil. operations		0.5 mil. operations	0.5 mil. operations		
300	350	450	580	660	900
80	90	125	147	190	220
265	330	400	500	630	800
147	160	200	265	330	440
265	330	400	500	630	800
147	160	225	265	330	500
225	280	350	400	500	720
160	200	250	300	400	500
185	225	300	380	420	630
300	350	450	580	660	900
-	-	-	-	-	-
-	-	-	-	-	-
75	100	125	150	200	200
100	125	150	200	250	300
200	250	300	400	500	600
200	250	300	400	500	600
5	5	5	6	6	7
9.2			22.4		
163×243×198			285×312×242		
2a2b			2a2b		
AU-100 (Max.4NO4NC)			AU-100 (Max.4NO4NC)		
-			-		

MT-400/□	MT-800/□
●	●
690V	690V
690V	690V
6kV	6kV
10A, 20	10A, 20
85~400A	200~800A
2.6	11.5
151×171×198	360×530×212

Contactors & Overload relays

Metasol MC 4P 18 to 85A

MC type
Magnetic Contactors

Frame size				18AF			
Type				MC-6a/4	MC-9a/4	MC-12a/4	MC-18a/4
	Screw clamp terminal			●			
Number of poles				4pole			
Rated operational voltage (Ue)				690V			
Rated insulation voltage (Ui)				690V			
Rated frequency				50/60Hz			
Rated impulse withstand voltage, Uimp				6kV			
Maximum operating rate in operating cycles per hour(AC1)				1800 operations per hour			
Durability	Mechanical			15 mil. Operations			
	Electrical			0.5 mil. Operations		0.8 mil. Operations	
Current and Power	Thermal current		A	25	25	25	40
	AC-1	200/240V	kW	9	9	9	15
			A	25	25	25	40
		380/400V	kW	17	17	17	27
			A	25	25	25	40
		500/550V	kW	21	21	21	35
			A	25	25	25	40
		690V	kW	27	27	27	44
			A	25	25	25	40
UL rating (50/60Hz)	Continuous current		A	25	25	25	32
	Single Phase	110~120V	HP	0.5	0.5	0.75	1
		220~240V	HP	1.5	1.5	2	3
		200~208V	HP	2	2	3	5
	Three Phase	220~240V	HP	3	3	5	7.5
		440~480V	HP	5	5	7.5	10
		550~600V	HP	7.5	7.5	10	15
	NEMA Size			00	00	0	0
Size and weight	AC Control	Weight	kg	0.33			
		Size(W×H×D)	mm	45×73.5× 79			
	DC Control	Weight	kg	0.5			
		Size(W×H×D)	mm	45×73.5×110.7			
Auxiliary(standard)				-			
Auxiliary	Side Mount			UA-1			
	Front Mount			AU-2, AU-4			

22AF	40AF		85AF			
MC-22a/4	MC-32a/4	MC-40a/4	MC-50a/4	MC-65a/4	MC-75a/4	MC-85a/4
●	●		●			
4pole	4pole		4pole			
690V	690V		690V			
690V	690V		1000V			
50/60Hz	50/60Hz		50/60Hz			
6kV	6kV		8kV			
1800 operations per hour	1800 operations per hour		1800 operations per hour			
15 mil. Operations	15 mil. Operations		12 mil. Operations			
1 mil. Operations	1 mil. Operations		1 mil. Operations			
40	50	60	80	100	110	135
15	18	22	30	37	41	51
40	50	60	80	100	110	135
27	35	42	56	70	76	95
40	50	60	80	100	110	135
35	43	52	70	88	97	120
40	50	60	80	100	110	135
44	55	66	88	110	120	150
40	50	60	80	100	110	135
32	45	50	70	80	90	100
2	2	3	3	5	5	7.5
3	5	5	7.5	10	15	15
7.5	7.5	10	10	15	20	25
7.5	10	10	15	20	25	30
10	20	25	30	40	50	50
15	20	25	30	40	50	50
1	1	1	2	2	2	3
0.4	0.59		1.2			
47.2×80×86.8	59×83.5×94.5		91×123.5×117.8			
0.5	0.7		1.29			
47.2×80×113.2	59×83.5×121		91×123.5×117.8			
-	-		-			
AU-1	AU-1		AU-1			
AU-2, AU-4	AU-2, AU-4		AU-2, AU-4			

Contactors & Overload relays

Metasol MC 4P 225 to 800A

MC type
Magnetic Contactors

Frame size				225AF				
Type				MC-100a/4	MC-130a/4	MC-150a/4	MC-185a/4	MC-225a/4
	Screw clamp terminal					●		
Number of poles				4pole				
Rated operational voltage (Ue)				690V				
Rated insulation voltage (Ui)				1000V				
Rated frequency				50/60Hz				
Rated impulse withstand voltage, Uimp				8kV				
Maximum operating rate in operating cycles per hour(AC1)				1200 operations per hour				
Durability	Mechanical			5 mil. Operations				
	Electrical			0.8 mil. Operations				
Current and Power	Thermal current		A	160	165	250	300	330
	AC-1	200/240V	kW	57	60	76	87	100
			A	150	155	200	230	260
		380/400V	kW	106	110	142	165	185
			A	150	155	200	230	260
		500/550V	kW	132	137	180	205	230
			A	150	155	200	230	260
		690V	kW	165	170	225	255	290
			A	150	155	200	230	260
UL rating (50/60Hz)	Continuous current		A	160	160	210	230	275
	Single Phase	110~120V	HP	7.5	10	15	15	15
		220~240V	HP	15	20	25	30	40
		200~208V	HP	30	40	40	60	60
	Three Phase	220~240V	HP	30	40	50	60	75
		440~480V	HP	60	75	100	125	150
		550~600V	HP	60	75	100	125	150
	NEMA Size			3	3	4	4	4
Size and weight	AC Control	Weight	kg	5.6				
		Size(W×H×D)	mm	175×203×185				
	DC Control	Weight	kg					
		Size(W×H×D)	mm					
Auxiliary(standard)				2a2b				
Auxiliary	Side Mount			AU-100				
	Front Mount			-				

* - FLA = 722 A, LRA = 5618 A
** - FLA = 566 A, LRA = 4495 A

400AF		
MC-265a/4	MC-330a/4	MC-400a/4
	●	
	4pole	
	690V	
	1000V	
	50/60Hz	
	8kV	
	1200 operations per hour	
	2.5 mil. Operations	
	0.5 mil. Operations	
360	420	500
115	135	160
300	350	420
215	250	300
300	350	420
265	315	375
300	350	420
335	390	470
300	350	420
300	350	450
-	-	-
-	-	-
75	100	125
100	125	150
200	250	300
200	250	300
5	5	5
	9.9	
	206×243×205	
	2a2b	
	AU-100	
	-	

800AF		
MC-500a/4	MC-630a/4	MC-800a/4
	●	
	4pole	
	690V	
	1000V	
	50/60Hz	
	8kV	
	1200 operations per hour	
	2.5 mil. Operations	
	0.5 mil. Operations	
630	750	900
245	255	310
630	660	800
450	470	570
630	660	800
560	590	710
630	660	800
710	740	900
630	660	800
580	660	900
-	-	-
-	-	-
150	200	200
200	250	300
400	500	600 *
400	500	600 **
6	6	7
	26.3	
	346×310 ×244	
	2a2b	
	AU-100	
	-	

Mini contactors

6 to 16A

Mini contactors

3NO main contacts
1 auxiliary contacts

Screw clamp type

Fast-on type

Cage clamp type

Solder pin type

Frame size		6A		9A		12A		16A	
Screw clamp type	AC coil	GMC-6M		GMC-9M		GMC-12M		GMC-16M	
	DC coil	GMD-6M		GMD-9M		GMD-12M		GMD-16M	
Fast-on type	AC coil	GMC-6MF		GMC-9MF		GMC-12MF		GMC-16MF	
	DC coil	GMD-6MF		GMD-9MF		GMD-12MF		GMD-16MF	
Cage clamp type	AC coil	GMC-6MC		GMC-9MC		GMC-12MC		GMC-16MC	
	DC coil	GMD-6MC		GMD-9MC		GMD-12MC		GMD-16MC	
Solder pin type	AC coil	GMC-6MP		GMC-9MP		GMC-12MP		GMC-16MP	
	DC coil	GMD-6MP		GMD-9MP		GMD-12MP		GMD-16MP	
Ratings / IEC60947-4		kW	A	kW	A	kW	A	kW	A
AC1			20		20		20		20
AC3	200/240V	1.5	7	2.2	9	3	12	4	15
	380/440V	2.2	6	4	9	5.5	12	7.5	16
	500/550V	3	5	3.7	6	4	7	5.5	9
	690V	3	4	4	5	4	5	4	5
Ratings / UL508		hp	A	hp	A	hp	A	hp	A
continuous current		Ith = 20A (maximum for cage clamp type is 10A)							
single phase	120V	1/2		1/2		1 *		-	
	230V/240V	1		1.5		2 **		-	
three phase	240V	1.5		3		3		-	
	480V	3		5		7.5 ***		-	
	600V	3		5		7.5		-	
	Wire Range : Copper, 75°C, Stranded, 18-12AWG								
NEMA size		00		00		00		0	

Additional auxiliary contacts

	Screw clamp type	Fast-on type	Cage clamp type	Solder pin type
2-pole, Front mount	AU-2M	AU-2MF	AU-2MC	
4-pole, Front mount	AU-4M	AU-4MF	AU-4MC	AU-1MP
2-pole, Side mount	AU-1M	AU-1MF	AU-1MC	

Note) * = 1/2 for cage clamp type, ** = 1.5hp for cage clamp type, *** = 5hp for cage clamp type
16AF : not approved from UL

Overload Relays

Bimetallic style

Type GT

GT-12M

Setting ranges (A)

0.1 - 0.16	4 - 6
0.16 - 0.25	5 - 8
0.25 - 0.4	6 - 9
0.4 - 0.63	7 - 10
0.63 - 1	9 - 13
1 - 1.6	12 - 16
1.6 - 2.5	
2.5 - 4	

Base for separate mount

Differential	GTK-12M
Non-differential (3-heater)	GTH-12M/3
Non-differential (2-heater)	GTH-12M

Digital motor protection relay

DMP□-S/Sa

DMP□-T/Ta

Model No.			DMP06-S/Sa	DMP60-S/Sa	DMP06-T/Ta	DMP06-T/Ta
Wiring			Screw type		Tunnel type	
Panel mount			Unit or Extension Note1)			
Operation time			Select either reverse time characteristics or definite time characteristics			
Protection		Over current	According to the setting time			
		Phase failure	3 sec.			
		Reverse phase	Within 0.1 sec.			
		Asymmetry	5 sec.			
		Stall	5 sec.			
		Lock	Within 0.5 sec.			
		Under current	3 sec.			
		Ground fault	Within 0.05~1 sec. Selectable (0.05~1.0sec)			
		Short circuit Note2)	Within 50ms			
Alarm			Variable (60~110% of the setting current)			
Current setting range (A)			0.5~6	5~60	0.5~6	5~60
Motor capacity (kW)		220~240V	0.09~0.75	1.1~11	0.09~0.75	1.1~11
		380~440V	0.12~1.5	2.2~22	0.09~1.5	2.2~22
Time setting range (sec)	Definite time	Delay in starting	0~60sec			
		Delay in operating	0~30sec			
	Inverse time		0~60sec			
	Reset		Manual reset			
Tolerance		Current	±5%			
		Time	±5% (or±0.5sec)			
Operating power Note3)		Voltage	AC 190~250V			
		Frequency	60Hz (50Hz)			
Aux. contact	OL	2-SPST	3A/250Vac Resistive load			
	AL	SPST	3A/250Vac Resistive load			
Insulation resistance			Over DC500V 100㏁			
Surge impulse voltage(IEC1000-4-5)			1.2×50㎲ 6kV (Apply standard wave form)			
Fast transient burst(IEC1000-4-4)			2.5kV/5min			
Environment	Temperature	Operation	-25~70℃			
		Storage	-30~80℃			
	Humidity		30~90% RH (No freezing)			
Display		7-Segment	3 phase current, cause of a fault			
		Bar-Graph	60~110% of real load current			
Mounting type			35mm Din-rail/Panel			

Note1) In extension type, the digital EMPR is calibrated with combining the display past and main body so, please cautious not to combine the display part and main body with different part No.
Note2) Instantaneous short circuit protection is optional
Note3) Operational voltage of AC 110V and 50Hz is optional

Manual motor starters

Quick selection table ... IEC rating

Frame			32AF																			
Type	Current adjustable type		MMS-32S										MMS-32H									
	Instantaneous type		-										MMS-32HI									
Breaking capacity			Standard										High breaking									
Handle Type			Toggle										Rotary									
Number of poles			3										3									
Rated operational voltage (Ue)			Up to 690V										Up to 690V									
Rated frequency			50/60 Hz										50/60 Hz									
Rated insulation voltage (Ui)			690V										690V									
Rated impulse voltage (Uimp)			6kV										6kV									
Utilization category	IEC 60 947-2 (Breaker)		Cat. A										Cat. A									
	IEC 60 947-4 (Motor starter)		AC 3										AC 3									
Mechanical endurance (Operating)			100,000										100,000									
Electrical endurance (Cycles)			100,000										100,000									
Max operating frequency per hour (Ope./h)			25										25									
Temperature compensation (Operation)			-20 ~ +60℃										-20 ~ +60℃									
Instantaneous short circuit release			13 × Ie max.										13 × Ie max.									
Overload protection			○										○									
Phase failure function			○										○									
Trip indicating function			×										×									
Test function			○										○									
Dimension(W×H×D)			45×105×54.4										45×105×60.3									
Weight (g)			320										360									
Rated breaking capacity (kA)	Rated operational current (I_e)	Thermal release Adjustment range (A)	220V 240V 230V		415V 400V		460V 440V		525V 500V		690V 600V		220V 240V 230V		415V 400V		460V 440V		525V 500V		690V 600V	
			Icu	Ics	Icu	Ics	Icu	Ics	Icu	Ics	Icu	Ics	Icu	Ics	Icu	Ics	Icu	Ics	Icu	Ics	Icu	Ics
	0.16	0.1~0.16	100	100	100	100	100	100	100	100	100	100	100	100	100	100	100	100	100	100	100	100
	0.25	0.16~0.25	100	100	100	100	100	100	100	100	100	100	100	100	100	100	100	100	100	100	100	100
	0.4	0.25~0.4	100	100	100	100	100	100	100	100	100	100	100	100	100	100	100	100	100	100	100	100
	0.63	0.4~0.63	100	100	100	100	100	100	100	100	100	100	100	100	100	100	100	100	100	100	100	100
	1	0.63~1	100	100	100	100	100	100	100	100	100	100	100	100	100	100	100	100	100	100	100	100
	1.6	1~1.6	100	100	100	100	100	100	100	100	3	3	100	100	100	100	100	100	100	100	100	100
	2.5	1.6~2.5	100	100	100	100	100	100	50	38	3	3	100	100	100	100	100	100	100	100	8	8
	4	2.5~4	100	100	100	100	50	38	15	11	3	3	100	100	100	100	100	100	100	100	8	8
	6	4~6	100	100	100	100	15	11	10	8	3	3	100	100	100	100	100	100	100	100	6	6
	8	5~8	100	100	100	100	15	11	10	8	3	3	100	100	100	100	50	38	50	38	6	6
	10	6~10	100	100	50	38	15	11	6	5	3	3	100	100	100	100	50	38	50	38	6	6
	13	9~13	100	100	50	38	10	8	6	5	3	3	100	100	100	100	50	38	42	32	6	6
	17	11~17	50	38	20	15	10	8	6	5	3	3	100	100	50	38	20	15	10	8	4	4
	22	14~22	40	30	15	11	8	6	6	5	3	3	100	100	50	38	20	15	10	8	4	4
	26	18~26	40	30	15	11	8	6	6	5	3	3	100	100	50	38	20	15	10	8	4	4
	32	22~32	30	22	15	11	6	4	5	4	3	3	100	100	50	38	20	15	10	8	4	4
	40	28~40	-	-	-	-	-	-	-	-	-	-	-	-	-	-	-	-	-	-	-	-
	50	34~50	-	-	-	-	-	-	-	-	-	-	-	-	-	-	-	-	-	-	-	-
	63	45~63	-	-	-	-	-	-	-	-	-	-	-	-	-	-	-	-	-	-	-	-
	75	55~75	-	-	-	-	-	-	-	-	-	-	-	-	-	-	-	-	-	-	-	-
	90	70~90	-	-	-	-	-	-	-	-	-	-	-	-	-	-	-	-	-	-	-	-
	100	80~100	-	-	-	-	-	-	-	-	-	-	-	-	-	-	-	-	-	-	-	-

63AF																				100AF																					
MMS-63S										MMS-63H										MMS-100S										MMS-100H									
-										MMS-63HI										-										MMS-100HI									
Standard										High breaking										Standard										High breaking									
Rotary										Rotary										Rotary										Rotary									
3										3										3										3									
Up to 690V										Up to 690V										Up to 690V										Up to 690V									
50/60 Hz										50/60 Hz										50/60 Hz										50/60 Hz									
1,000V										1,000V										1,000V										1,000V									
8kV										8kV										8kV										8kV									
Cat. A										Cat. A										Cat. A										Cat. A									
AC 3										AC 3										AC 3										AC 3									
50,000										50,000										50,000										50,000									
25,000										25,000										25,000										25,000									
25										25										25										25									
-20 ~ +60℃										-20 ~ +60℃										-20 ~ +60℃										-20 ~ +60℃									
13 × Ie max.										13 × Ie max.										13 × Ie max.										13 × Ie max.									
○										○										○										○									
○										○										○										○									
×										×										○										○									
○										○										○										○									
55 × 125 × 112.3										55 × 125 × 112.3										70 × 165 × 138										70 × 165 × 138									
1,000										1,000										2,200										2,200									
220V 240V 230V		415V 400V		460V 440V		525V 500V		690V 600V		220V 240V 230V		415V 400V		460V 440V		525V 500V		690V 600V		220V 240V 230V		415V 400V		460V 440V		525V 500V		690V 600V		220V 240V 230V		415V 400V		460V 440V		525V 500V		690V 600V	
Icu	Ics	Icu	Ics	Icu	Ics	Icu	Ics	Icu	Ics	Icu	Ics	Icu	Ics	Icu	Ics	Icu	Ics	Icu	Ics	Icu	Ics	Icu	Ics	Icu	Ics	Icu	Ics	Icu	Ics	Icu	Ics	Icu	Ics	Icu	Ics	Icu	Ics	Icu	Ics
-	-	-	-	-	-	-	-	-	-	-	-	-	-	-	-	-	-	-	-	-	-	-	-	-	-	-	-	-	-	-	-	-	-	-	-	-	-	-	-
-	-	-	-	-	-	-	-	-	-	-	-	-	-	-	-	-	-	-	-	-	-	-	-	-	-	-	-	-	-	-	-	-	-	-	-	-	-	-	-
-	-	-	-	-	-	-	-	-	-	-	-	-	-	-	-	-	-	-	-	-	-	-	-	-	-	-	-	-	-	-	-	-	-	-	-	-	-	-	-
-	-	-	-	-	-	-	-	-	-	-	-	-	-	-	-	-	-	-	-	-	-	-	-	-	-	-	-	-	-	-	-	-	-	-	-	-	-	-	-
-	-	-	-	-	-	-	-	-	-	-	-	-	-	-	-	-	-	-	-	-	-	-	-	-	-	-	-	-	-	-	-	-	-	-	-	-	-	-	-
-	-	-	-	-	-	-	-	-	-	-	-	-	-	-	-	-	-	-	-	-	-	-	-	-	-	-	-	-	-	-	-	-	-	-	-	-	-	-	-
-	-	-	-	-	-	-	-	-	-	-	-	-	-	-	-	-	-	-	-	-	-	-	-	-	-	-	-	-	-	-	-	-	-	-	-	-	-	-	-
-	-	-	-	-	-	-	-	-	-	-	-	-	-	-	-	-	-	-	-	-	-	-	-	-	-	-	-	-	-	-	-	-	-	-	-	-	-	-	-
-	-	-	-	-	-	-	-	-	-	-	-	-	-	-	-	-	-	-	-	-	-	-	-	-	-	-	-	-	-	-	-	-	-	-	-	-	-	-	-
-	-	-	-	-	-	-	-	-	-	-	-	-	-	-	-	-	-	-	-	-	-	-	-	-	-	-	-	-	-	-	-	-	-	-	-	-	-	-	-
100	100	100	100	15	12	10	8	4	3	100	100	100	100	50	38	50	38	6	5	-	-	-	-	-	-	-	-	-	-	-	-	-	-	-	-	-	-	-	-
100	100	50	38	10	8	6	5	4	3	100	100	100	100	50	38	42	32	6	5	-	-	-	-	-	-	-	-	-	-	-	-	-	-	-	-	-	-	-	-
100	100	25	19	10	8	6	5	4	3	100	100	50	50	50	38	12	9	5	5	100	100	50	38	40	30	25	19	10	8	100	100	100	100	50	38	35	27	12	9
50	38	25	19	10	8	6	5	4	3	100	100	50	50	50	38	12	9	5	5	100	100	50	38	40	30	25	19	10	8	100	100	100	50	50	38	35	27	12	9
50	38	25	19	10	8	6	5	4	3	100	100	50	50	35	27	12	9	5	5	100	100	50	38	40	30	25	19	10	8	100	100	100	50	50	38	35	27	12	9
50	38	25	19	10	8	6	5	4	3	100	100	50	50	35	27	10	8	5	5	100	100	50	38	40	30	15	11	10	8	100	100	100	50	50	38	25	19	12	9
50	38	25	19	10	8	6	5	4	3	100	100	50	50	35	27	10	8	5	5	100	100	50	38	40	30	15	11	6	5	100	100	100	50	50	38	20	15	12	9
50	38	25	19	10	8	6	5	4	3	100	100	50	50	35	27	10	8	5	5	100	100	50	38	40	30	12	9	6	5	100	100	100	50	50	38	15	11	10	8
50	38	25	19	10	8	6	5	4	3	100	100	50	50	35	27	10	8	5	5	100	100	50	38	40	30	12	9	6	5	100	100	100	50	50	38	15	11	8	6
-	-	-	-	-	-	-	-	-	-	-	-	-	-	-	-	-	-	-	-	100	100	50	38	40	30	8	6	5	4	100	100	75	50	50	38	12	9	6	6
-	-	-	-	-	-	-	-	-	-	-	-	-	-	-	-	-	-	-	-	100	100	50	38	40	30	8	6	5	4	100	100	75	50	50	38	12	9	6	6
-	-	-	-	-	-	-	-	-	-	-	-	-	-	-	-	-	-	-	-	100	100	50	38	40	30	8	6	5	4	100	100	75	50	50	38	12	9	6	6

Molded case circuit breakers

Susol MCCB 100AF to 800AF Series

				TE100		TE160		TD100			TD160		
Frame size			[AF]	100		160		100			160		
Rated current, In ♣			[A]	16~100		100,125,160		16, 20, 25, 32, 40, 50, 63, 80, 100			1P: 16, 20, 25, 32, 40, 50, 63, 80,100,125, 160 2, 3P: 100, 125, 160		
No. of poles				3,4		3,4		2*, 3, 4			1, 2*, 3, 4		
Rated operational voltage, Ue	AC		[V]	690		690		690			240(1P), 690		
	DC		[V]	500		500		500			250(1P), 500		
Rated impulse withstand voltage, Uimp			[kV]					8			8		
Rated insulation voltage, Ui [V]				8		8		750			750		
Rated ultimate short-circuit breaking capacity, Icu				S	N	S	N	N	H	L	N	H	L
AC 50/60Hz 220/240V			[kA]	50	85	50	85	85	100	200	30(1P) 85	50(1P) 100	200
		380/415V	[kA]	37	50	37	50	50	85	150	50	85	150
		440/460V	[kA]	25	37	25	37	50	70	130	50	70	130
		480/500V	[kA]	18	25	18	25	30	50	65	30	50	65
		660/690V	[kA]	6	8	6	8	5	8	10	5	8	10
DC		250V	[kA]	37	50	37	50	42	65	100	16(1P) 42	25(1P) 65	100
		500V(2poles in series)	[kA]	37	50	37	50	42	65	100	42	65	100
Rated service breaking capacity, Ics			[%Icu]	100%	100%	100%	100%	100%	100%	100%	100%	100%	100%
Rated short-circuit making capacity Icm													
AC 50/60Hz 220/240V			[kA]	105	187	105	187	187	220	440	105(1P) 187	105(1P) 220	440
		380/415V	[kA]	77.7	105	77.7	105	105	187	330	105	187	330
		440/460V	[kA]	52.5	77.7	52.5	77.7	105	154	286	105	154	286
		480/500V	[kA]	36	52.5	36	52.5	63	105	143	63	105	143
		660/690V	[kA]	9.2	13.6	9.2	13.6	8	14	17	8	14	17
Category of utilization				A		A		A			A		
Isolation behavior				●		●		●			●		
Trip unit (release)													
Thermal-Magnetic													
●fixed-thermal, fixed-magnetic			FTU	●		●		●			●		
●adjustable-thermal, fixed-magnetic			FMU	●		●		●			●***		
●adjustable-thermal, adjustable-magnetic			ATU	-		-		-			-		
●magnetic only			MTU	-		-		-			-		
Electronic													
●LSI			ETS	-		-		-			-		
●LSI			ETM	-		-		-			-		
Option	Earth-fault protection, Ig			-		-		-			-		
	Zone selective interlocking, ZSI			-		-		-			-		
	Ammeter			-		-		-			-		
	Communication			-		-		-			-		
	Earth-leakage protection module			-		-		-			-		
Connection	fixed	front-connection		●		●		●			●		
		rear-connection		●		●		●			●***		
	plug-in	front-connection		-		-		●			●***		
		rear-connection		-		-		●			●***		
Mechanical life			[operations]	25000		25000		25000			25000		
Electrical life @ 415 V AC			[operations]	10000		10000		10000			10000		
Basic dimensions, W×H×D (front connection)	1-pole		[mm]	-		-		-			35×140×86		
	3-pole		[mm]	76×130×82		76×130×82		90×140×86			90×140×86		
	4-pole		[mm]	101×130×82		101×130×82		120×140×86			120×140×86		
Weight (front connection)	1-pole		[kg]	-		-		-			0.57		
	3-pole		[kg]	1.05		1.05		1.5			1.5		
	4-pole		[kg]	1.35		1.35		1.8			1.8		
Reference standard				IEC60947-2		IEC60947-2		IEC60947-2			IEC60947-2		

Note) ● applicable or available

♣ Applicable to MCCBs equipped with FTU, FMU, ATU
* 2 pole MCCB in 3pole frame size

** 700A only available for TS800FTU
*** Not applicable to 1pole

※ The trip unit ATU is available from 125A

TS100			TS160			TS250			TS400			TS630			TS800		
100			160			250			400			630			800		
40, 50, 63, 80, 100			(100)*, 125, 160			125, 160, 200, 250			300, 400			500, 630			700**, 800		
2*, 3, 4			2*, 3, 4			2*, 3, 4			2*, 3, 4			2*, 3, 4			2*, 3, 4		
690			690			690			690			690			690		
500			500			500			500			500			500		
8			8			8			8			8			8		
750			750			750			750			750			750		
N	H	L	N	H	L	N	H	L	N	H	L	N	H	L	N	H	L
100	120	200	100	120	200	100	120	200	100	120	200	100	120	200	100	120	200
50	85	150	50	85	150	50	85	150	65	85	150	65	85	150	65	100	150
50	70	130	50	70	130	50	70	130	65	85	130	65	85	130	65	100	130
42	65	85	42	65	85	42	65	85	42	65	85	42	65	85	42	85	100
10	15	20	10	15	20	10	15	20	10	20	35	10	20	35	10	20	35
50	85	100	50	85	100	50	85	100	50	85	100	50	85	100	50	85	100
50	85	100	50	85	100	50	85	100	50	85	100	50	85	100	50	85	100
100%	100%	100%	100%	100%	100%	100%	100%	100%	100%	100%	100%	100%	100%	100%	100%	100%	100%
220	264	440	220	264	440	220	264	440	220	264	440	220	264	440	220	264	440
105	187	330	105	187	330	105	187	330	143	187	330	143	187	330	143	220	330
105	154	286	105	154	286	105	154	286	143	187	286	143	187	286	143	220	286
88	143	187	88	143	187	88	143	187	88	143	187	88	143	187	88	187	220
17	30	40	17	30	40	17	30	40	17	40	74	17	40	74	17	40	74
A			A			A			A			A			A		
●			●			●			●			●			●		
●			●			●			●			●			●		
●			●			●			●			●			●		
-			●			●			●			●			●		
●			●			●			●			●			●		
●			●			●			●			●			●		
-			-			-			●			●			●		
-			-			-			●			●			●		
-			-			-			●			●			●		
-			-			-			●			●			●		
-			-			-			●			●			●		
-			-			-			●			●			●		
●			●			●			●			●			●		
●			●			●			●			●			●		
●			●			●			●			●			●		
●			●			●			●			●			●		
25000			25000			25000			20000			20000			10000		
10000			10000			10000			6000			6000			3000		
-			-			-			-			-			-		
105×160×86			105×160×86			105×160×86			140×260×110			140×260×110			210×320×135		
140×160×86			140×160×86			140×160×86			186.5×260×110			186.5×260×110			280×320×135		
-			-			-			-			-			-		
2			2			2			5.4			5.4			15.1		
2.6			2.6			2.6			7.2			7.2			19.6		
IEC60947-2			IEC60947-2			IEC60947-2			IEC60947-2			IEC60947-2			IEC60947-2		

	Amb. Temp.	-5°C	0°C	10°C	20°C	25°C	30°C	35°C	40°C	45°C	50°C
Calibrated for 40°C	**TD160**	122.5%	120.0%	115.0%	110.0%	107.5%	105.0%	102.5%	100.0%	97.5%	95.0%
	TS250	122.5%	120.0%	115.0%	110.0%	107.5%	105.0%	102.5%	100.0%	97.5%	95.0%
	TS630	110.0%	109.0%	107.0%	105.0%	104.0%	103.0%	101.5%	100.0%	98.5%	97.0%
	TS800	110.0%	109.0%	107.0%	105.0%	104.0%	103.0%	101.5%	100.0%	98.5%	97.0%
Calibrated for 50°C	**TD160**	122.0%	120.0%	116.0%	112.0%	110.0%	108.0%	106.0%	104.0%	102.0%	100.0%
	TS250	122.0%	120.0%	116.0%	112.0%	110.0%	108.0%	106.0%	104.0%	102.0%	100.0%
	TS630	122.2%	112.0%	110.0%	108.0%	107.0%	106.0%	104.5%	103.0%	101.5%	100.0%
	TS800	112.2%	112.0%	110.0%	108.0%	107.0%	106.0%	104.5%	103.0%	101.5%	100.0%

Molded case circuit breakers

Susol MCCB 1600AF Series

Electrical characteristics

				TS1000			TS1250		TS1600	
Type				TS1000			TS1250		TS1600	
Ampere frame				1000			1250		1600	
Pole				3, 4			3, 4		3, 4	
Rated current,(A)		In	-5~40°C	800, 1000			1250		1600	
			50°C	800, 1000			1250		1560	
			65°C	800, 1000			1240		1420	
Rated insulation voltage, (V)		Ui		1000			1000		1000	
Rated impulse withstand voltage, (kV)		Uimp		8			8		8	
Rated operational voltage, (V)		Ue	AC50/60Hz	690			690		690	
			DC	-			-		-	
Rated short-circuit breaking capacity				N	H	L	N	H	N	H
IEC60947-2	Rated ultimate short-circuit		220/240V	55	75	200	55	75	55	75
AC50/60Hz	breaking capacity, (kA) (Icu)		380/415V	50	70	150	50	70	50	70
(sym)			440/460V	50	65	130	50	65	50	65
			480/500V	40	50	100	40	50	40	50
			660/690V	35	45	-	35	45	35	45
		DC	250V 2P	-	-	-	-	-	-	-
			500V 2P	-	-	-	-	-	-	-
			750V 3P	-	-	-	-	-	-	-
	Rated service breaking capacity (Ics)	%Icu		100%	75%	100%	100%	75%	100%	75%
	Rated short-circuit making capacity (kA) (Icw)	AC50/60Hz	1s	25		12	25		25	
		3s		-			-		-	
Overriding instantaneous protection			kA peak	50		30	50		50	
Isolation				○			○		○	
Category				B		A	B		B	
(Life cycle)	Mechanical life (operations)			10000		4000	10000		10000	
	Electrical life (operations)	440V	In/2	6000		4000	5000		5000	
			In	5000		3000	4000		2000	
		690V	In/2	4000		3000	3000		2000	
			In	2000		2000	2000		1000	
Pollution degree				3			3		3	
Dimension (mm) (H×W×D)			3-pole	327×210×152.5						
			4-pole	327×280×152.5						
Weight (kg)			3-pole	13						
			4-pole	16.8						

Overview

Classification	N type	A type	P type	S type
Externals				
Current protection	• L / S / I / G / Thermal	• L / S / I / G / Thermal • ZSI(Protective coordination)	• L / S / I / G / Thermal(Continuous) • ZSI(Protective coordination)	• P type
Other protection	-	• Earth leakage (Option)	• Earth leakage(Option) • Over/Under current • Over/Under frequency • Unbalance(Voltage/Current) • Reverse power	• P type
Measurement function	-	• Current (R / S / T / N)	• 3 Phase Voltage/Current RMS/Vector • Power(P, Q, S), PF(3-Phase) • Energy(Positive/Negative) • Frequency, Demand	• 3 Phase Voltage/Current RMS/Vector • Power(P, Q, S), PF(3-Phase) • Energy(Positive/Negative) • Frequency, Demand • Voltage/Current harmonics (1st~63th) • 3 Phase Waveforms • THD, TDD, K-Factor
Fine adjustment	-	-	• Fine adjustment for long/short time delay/instantaneous/ ground	• P type
Pre Trip Alarm	-	-	• Overload protection relays : DO (Alarm) (Ground fault is not available when using Pre trip alarm)	• P type
Digital Output	-	• 3DO (Fixed) • L, S/I, G Alarm	• 3DO (Programmable) • Trip, Alarm, General	• P type
IDMTL setting	-	-	• Compliance with IEC60255-3 SIT, VIT, EIT, DT	• P type
Communication	-	• Modbus/RS-485 • Profibus-DP	• Modbus / RS-485 • Profibus-DP	• Modbus / RS-485 • Profibus-DP
Power supply	• Self Power -Power source works over 25% of current of In (one pole)	• Self Power - Power source works over 25% of current of In (one pole) - External power source are required for comm. • AC/DC 100~250V • DC 24~60V	• AC/DC 100~250V • DC 24~60V Basic protection function(L / S / I / G) is still under normal operation without control power.	• AC/DC 100~250V • DC 24~60V
RTC timer	• Available	• Available	• Available	• Available
LED for trip info.	• Long time delay • Short time delay/Instantaneous • Ground fault	• N type	• N type	• N type
Fault recording	-	• 10 records (Fault/Current/Date and Time)	• 256 records (Fault/Current/Date and Time)	• 256 records • Last fault wave recording (3 Phase)
Event recording	-	-	• 256 records(Content, Status, Date)	• P type
Operating button	• Reset button	• Reset, Menu Up/Down, Left/Right, Enter	• A type	• A type

Molded case circuit breakers

Metasol 30AF to 250AF Series

Frame Size(AF)		30	50			60	
Type		S-Type	N-Type	S-Type	H-Type	N-Type	S-Type
Type and Pole	2 pole	ABS32c	ABN52c	ABS52c	ABH52c	ABN62c	ABS62c
	3 pole	ABS33c	ABN53c	ABS53c	ABH53c	ABN63c	ABS63c
	4 pole	ABS34c	ABN54c	ABS54c	ABH54c	ABN64c	ABS64c
Rated current, In	A	(3, 5, 10) 15, 20, 30	15, 20, 30, 40, 50		15, 20, 30, 40, 50	15, 20, 30, 40, 50, 60	
Rated operational voltage, Ue	AC(V)	690	690	690	690	690	690
	DC(V)	500	500	500	500	500	500
Rated insulation voltage, Ui	V	750	750	750	750	750	750
Rated impulse withstand voltage, Uimp	kV	8	8	8	8	8	8
Rated short-circuit breaking capacity(Icu) kA (Sym), KSC8321, IEC 60947-2							
AC	690V	2.5	2.5	5	10	2.5	5
	480/500V	7.5	7.5	10	35	7.5	10
	415/460V	14 (10)	14	18	50	14	18
	380V	18 (14)	18	22	50	18	22
	220/250V	30 (25)	30	35	100	30	35
DC	500V(3P)	5	5	10	30	5	10
	250V(2P)	5	5	10	30	5	10
Service breaking capacity(%Icu), Ics		100	100	100	100	100	100
Category of use		A	A	A	A	A	A
Endurance (Number of operations)	Mechanical						
	Electrical						
Type of trip unit							
Thermal-magnetic release		fixed	fixed	fixed	fixed	fixed	fixed
Hydraulic-magnetic release							
Magnetic release only without thermal trip							
Earth leakage protection	for 3 pole	▲	▲	▲	▲	▲	▲
Accessories							
Electrical auxiliaries	Auxiliary switch	●	●	●	●	●	●
	Alarm switch	●	●	●	●	●	●
	Shunt trip	●	●	●	●	●	●
	Undervoltage trip	●	●	●	●	●	●
External accessories	Direct rotary handle	●	●	●	●	●	●
	Extended rotary handle	●	●	●	●	●	●
	Terminal shield	●	●	●	●	●	●
	Insulation barrier	●	●	●	●	●	●
	Rear connection	●	●	●	●	●	●
	Pad handle lock	●	●	●	●	●	●
	Plug-in device	●	●	●	●	●	●
Dimensions (mm)	W × H × D (3P)	75 × 130 × 60	75 × 130 × 60		90 × 155 × 60	75 × 130 × 60	
Weight(kg)	2 pole	0.5	0.5	0.5	0.7	0.5	0.5
	3 pole	0.7	0.7	0.7	1	0.7	0.7
	4 pole	0.9	0.9	0.9	1.2	0.9	0.9

Note) 1. ● applicable or available
2. ▲ available as a separate breaker

100	125		250		
N-Type	S-Type	H-Type	N-Type	S-Type	H-Type
ABN102c	ABS102c	ABH102c	ABN202c	ABS202c	ABH202c
ABN103c	ABS103c	ABH103c	ABN203c	ABS203c	ABH203c
ABN104c	ABS104c	ABH104c	ABN204c	ABS204c	ABH204c
15, 20, 30, 40, 50, 60, 75, 100	15, 20, 30, 40, 50, 60, 75, 100, 125		100, 125, 150, 175, 200, 225, 250		
690	690	690	690	690	690
500	500	500	500	500	500
750	750	750	750	750	750
8	8	8	8	8	8
5	8	10	8	8	10
10	25	30	18	26	30
18	37	50	26	37	50
22	42	50	30	42	50
35	85	100	65	85	100
10	20	30	10	20	30
10	20	30	10	20	30
100	100	100	100	100	100
A	A	A	A	A	A
fixed	fixed	fixed	fixed	fixed	fixed
▲	▲	▲	▲	▲	▲
●	●	●	●	●	●
●	●	●	●	●	●
●	●	●	●	●	●
●	●	●	●	●	●
●	●	●	●	●	●
●	●	●	●	●	●
●	●	●	●	●	●
●	●	●	●	●	●
●	●	●	●	●	●
●	●	●	●	●	●
●	●	●	●	●	●
75 × 130 × 60	90 × 155 × 60		105 × 165 × 60		
0.5	0.7	0.7	1.1	1.1	1.1
0.7	1	1	1.2	1.2	1.2
0.9	1.2	1.2	1.6	1.6	1.6

	Amb. Temp.	-5°C	0°C	10°C	20°C	25°C	30°C	35°C	40°C	45°C	50°C
Calibrated for 40°C	In=15 to 30	111.9%	111.3%	110.0%	108.0%	106.6%	104.9%	102.7%	100.0%	96.8%	93.3%
	In=40 to 100	110.2%	109.8%	108.7%	107.0%	105.8%	104.3%	102.4%	100.0%	97.2%	94.0%
	In=100 to 225	114.3%	113.2%	110.6%	107.5%	105.8%	104.0%	102.0%	100.0%	97.9%	95.6%
	In=250 to 800	110.0%	109.0%	107.0%	105.0%	104.0%	103.0%	101.5%	100.0%	98.5%	97.0%

Molded case circuit breakers

Metasol 400AF to 1200AF Series

Frame Size(AF)		400			
Type		N-Type	S-Type	H-Type	L-Type
Type and Pole	2 pole	ABN402c	ABS402c	ABH402c	ABL402c
	3 pole	ABN403c	ABS403c	ABH403c	ABL403c
	4 pole	ABN404c	ABS404c	ABH404c	ABL404c
Rated current, In	A	250, 300, 350, 400			
Rated operational voltage, Ue	AC(V)	690	690	690	690
	DC(V)	500	500	500	500
Rated insulation voltage, Ui	V	750	750	750	750
Rated impulse withstand voltage, Uimp	kV	8	8	8	8
Rated short-circuit breaking capacity(Icu) kA (Sym), KSC8321, IEC 60947-2					
AC	690V	5	8	10	14
	480/500V	18	35	50	65
	415/460V	37	50	65	85
	380V	42	65	70	100
	220/250V	50	75	85	125
DC	500V(3P)	10	20	40	40
	250V(2P)	10	20	40	40
Service breaking capacity(%Icu), Ics		100	100	100	75
Category of use		A	A	A	A
Endurance (Number of operations)	Mechanical	-	-	-	-
	Electrical	-	-	-	-
Type of trip unit					
Thermal-magnetic release		fixed	fixed	fixed	fixed
Hydraulic-magnetic release		-	-	-	-
Magnetic release only without thermal trip		-	-	-	-
Earth leakage protection	for 3 pole	▲	▲	▲	▲
Accessories					
Electrical auxiliaries	Auxiliary switch	●	●	●	●
	Alarm switch	●	●	●	●
	Shunt trip	●	●	●	●
	Undervoltage trip	●	●	●	●
External accessories	Direct rotary handle	●	●	●	●
	Extended rotary handle	●	●	●	●
	Terminal shield	●	●	●	●
	Insulation barrier	●	●	●	●
	Rear connection	●	●	●	●
	Mechanical interlock	●	●	●	●
	Plug-in device	●	●	●	●
Dimensions (mm)	W × H × D (3P)	140 × 257 × 109			
Weight(kg)	2 pole	5.2	5.2	5.2	5.2
	3 pole	6.2	6.2	6.2	6.2
	4 pole	7.8	7.8	7.8	7.8

Note) 1. ● applicable or available
2. ▲ available as a separate breaker

800			1000		1200		
N-Type	S-Type	L-Type	S-Type	L-Type	S-Type		L-Type
ABN802c	ABS802c	ABL802c	-	-	-	-	-
ABN803c	ABS803c	ABL803c	ABS1003b	ABL1003b	ABS1203b	ABS1203bE	ABL1203b
ABN804c	ABS804c	ABL804c	ABS1004b	ABL1004b	ABS1204b	-	ABL1204b
500, 630, 700, 800			1000		1200		
690	690	690	600	600	600	600	600
500	500	500	-	-	-	-	-
750	750	750	690	690	690	690	690
8	8	8	6	6	6	6	6
8	10	14	-	-	-	-	-
25	45	65	50	75	50	50	75
37	65	85	65	85	65	65	85
45	75	100	65	85	65	65	85
50	85	125	100	125	100	100	125
10	20	40	-	-	-	-	-
10	20	40	-	-	-	-	-
100	100	75	50	50	50	50	50
A	A	A	A	A	A	A	A
-	-	-	2500	2500	2500	2500	2500
-	-	-	500	500	500	500	500
fixed	fixed	fixed	fixed	fixed	fixed	-	fixed
-	-	-	-	-	-	-	-
-	-	-	-	-	-	-	-
▲	▲	▲	-	-	-	●	-
●	●	●	●	●	●	●	●
●	●	●	●	●	●	●	●
●	●	●	●	●	●	●	●
●	●	●	●	●	●	●	●
●	●	●	-	-	-	-	-
●	●	●	-	-	-	-	-
●	●	●	-	-	-	-	-
●	●	●	●	●	●	●	●
●	●	●	●	●	●	●	●
●	●	●	-	-	-	-	-
●	●	●	-	-	-	-	-
210×280×109			220×400×105		220×400×105		
11	11	11	-	-	-	-	-
11.5	11.5	11.5	19.6	19.6	-	-	-
18.2	18.2	18.2	-	-	25.7	25.7	25.7

	Amb. Temp.	-5°C	0°C	10°C	20°C	25°C	30°C	35°C	40°C	45°C	50°C
Calibrated for 40°C	In=15 to 30	111.9%	111.3%	110.0%	108.0%	106.6%	104.9%	102.7%	100.0%	96.8%	93.3%
	In=40 to 100	110.2%	109.8%	108.7%	107.0%	105.8%	104.3%	102.4%	100.0%	97.2%	94.0%
	In=100 to 225	114.3%	113.2%	110.6%	107.5%	105.8%	104.0%	102.0%	100.0%	97.9%	95.6%
	In=250 to 800	110.0%	109.0%	107.0%	105.0%	104.0%	103.0%	101.5%	100.0%	98.5%	97.0%

Earth Leakage Circuit Breakers

Metasol 30AF to 250AF Series

Frame Size(AF)		30	50			60	
Type		S-Type	N-Type	S-Type	H-Type	N-Type	S-Type
Type and Pole	2-pole	-	EBN52c	-	-	-	-
	3-pole	EBS33c	EBN53c	EBS53c	EBH53c	EBN63c	EBS63c
	4-pole	EBS34c	-	EBS54c	EBH54c	-	EBS64c
Protective function		Overload, Short-circuit and Ground fault	Overload, Short-circuit and Ground fault		Overload, Short-circuit and Ground fault	Overload, Short-circuit and Ground fault	
Rated current, In A		15, 20, 30	15, 20, 30, 40, 50		15, 20, 30, 40, 50	60	
Rated residual current, I△n	mA	30, 100/200/500	30, 100/200/500		30, 100/200/500	30,100/200/500	
Rated operational voltage, Ue	AC(V)	220/460	220/460		220/460	220/460	
Rated impulse withstand voltage, Uimp	kV	6	6		6	6	
Residual current off-time at I△n	sec	≤0.1 sec	≤0.1 sec		≤0.1 sec	≤0.1 sec	
Rated short-circuit breaking capacity (Icu) kA (Sym), KSC8321, IEC 60947-2							
AC	460V	14	14	18	50	14	18
	415V	14	14	18	50	14	18
	220/250V	30	30	35	100	30	35
Service breaking capacity(%Icu), Ics		100	100	100	100	100	100
Category of use		A	A	A	A	A	A
Endurance	Mechanical	25000	25000	25000	25000	25000	25000
(Number of operations)	Electrical	10000	10000	10000	10000	10000	10000
Type of trip unit							
Thermal-magnetic release		fixed	fixed	fixed	fixed	fixed	fixed
Hydraulic-magnetic release							
Magnetic release only without thermal trip							
Earth leakage protection	for 3 pole	▲	▲	▲	▲	▲	▲
Accessories							
Electrical auxiliaries	Auxiliary switch	●	●	●	●	●	●
	Alarm switch	●	●	●	●	●	●
	Shunt trip						
	Undervoltage trip						
External accessories	Insulation barrier	●	●	●	●	●	●
	Terminal cover (Long)	●	●	●	●	●	●
	Terminal cover (Short)	●	●	●	●	●	●
	Rotary handle (Direct)	●	●	●	●	●	●
	Rotary handle (Direct, Key lock)	●	●	●	●	●	●
	Rotary handle (Extended)	●	●	●	●	●	●
	Rear terminal (Bar)				●	●	●
	Rear terminal (Round)	●	●	●	●	●	●
	Plug-in kit	●	●	●	●	●	●
	Pad handle lock	●	●	●	●	●	●
Dimensions (mm)	W×H×D (3P)	75×130×60	75×130×60		90×155×60	75×130×60	
Weight(kg)	2 pole	-	0.5	-	-	-	-
	3 pole	0.7	0.7	0.7	1	0.7	0.7
	4 pole	0.9	-	0.9	1.2	-	0.9

Note) 1. ● applicable or available
2. ▲ available as a separate breaker

100	125		250		
N-Type	S-Type	H-Type	N-Type	S-Type	H-Type
EBN102c	-	-	EBN202c	-	-
EBN103c	EBS103c	EBH103c	EBN203c	EBS203c	EBH203c
EBN104c	EBS104c	EBH104c	-	EBS204c	EBH204c
Overload, Short-circuit and Ground fault	Overload, Short-circuit and Ground fault		Overload, Short-circuit and Ground fault		
60, 75, 100	15, 20, 30, 40, 50, 60, 75, 100, 125		100, 125, 150, 175, 200, 225, 250		
30, 100/200/500	30,100/200/500		30,100/200/500		
220/460	220/460		220/460		
6	6		6		
≤0.1 sec	≤0.1 sec		≤0.1 sec		
18	37	50	26	37	50
18	37	50	26	37	50
35	85	100	65	85	100
100	100	100	100	100	
A	A	A	A	A	
25000	25000	25000	20000	20000	20000
10000	10000	10000	5000	5000	5000
fixed	fixed	fixed	fixed	fixed	fixed
▲	▲	▲	▲	▲	▲
●	●	●	●	●	●
●	●	●	●	●	●
●	●	●	●	●	●
●	●	●	●	●	●
●	●	●	●	●	●
●	●	●	●	●	●
●	●	●	●	●	●
●	●	●	●	●	●
●	●	●	●	●	●
●	●	●	●	●	●
●	●	●	●	●	●
●	●	●	●	●	●
75×130×60	90×155×60		105×165×60		
0.5	-	-	1.1	-	-
0.7	1	1	1.2	1.2	1.2
0.9	1.2	1.2	-	1.5	1.5

Earth Leakage Circuit Breakers

Metasol 400AF to 1200AF Series

Frame Size(AF)		400			
Type		N-Type	S-Type	H-Type	L-Type
Type and Pole	3-pole	EBN403c	EBS403c	EBH403c	EBL403c
	4-pole	EBN404c	EBS404c	EBH404c	EBL404c
Protective function		Overload, Short-circuit and Ground fault			
Rated current, In A		250, 300, 350, 400			
Rated residual current, I△n	mA	30, 100/200/500mA			
Rated operational voltage, Ue	AC(V)	220/460	220/460	220/460	220/460
Rated impulse withstand voltage, Uimp	kV	6	6	6	6
Residual current off-time at I△n	sec	0.1 sec	0.1 sec	0.1 sec	0.1 sec
Rated short-circuit breaking capacity (Icu) kA (Sym), KSC8321, IEC 60947-2					
AC	415/460V	37	50	65	85
	220/250V	50	75	85	125
Service breaking capacity(%Icu), Ics		100	100	100	75
Category of use		A	A	A	A
Endurance	Mechanical	40000	40000	40000	40000
(Number of operations)	Electrical	10000	10000	10000	10000
Type of trip unit					
Thermal-magnetic release		fixed	fixed	fixed	fixed
Hydraulic-magnetic release		-	-	-	-
Magnetic release only without thermal trip		-	-	-	-
Earth leakage protection	for 3 pole	▲	▲	▲	▲
Accessories					
Electrical auxiliaries	Auxiliary switch	●	●	●	●
	Alarm switch	●	●	●	●
	Shunt trip	●	●	●	●
	Undervoltage trip	●	●	●	●
External accessories	Insulation barrier	●	●	●	●
	Terminal cover (Long) - 2, 3pole	●	●	●	●
	Terminal cover (Long) - 4pole	●	●	●	●
	Rotary handle (Direct)	●	●	●	●
	Rotary handle (Extended)	●	●	●	●
	Mechanical interlock - 2, 3pole	●	●	●	●
	Mechanical interlock - 4pole	●	●	●	●
	Rear terminal - 2pole	●	●	●	●
	Rear terminal - 3pole	●	●	●	●
	Rear terminal - 4pole	●	●	●	●
	Plug-in kit	●	●	●	●
Dimensions (mm)	W × H × D (3P)	140 × 257 × 109			
Weight(kg)	2 pole	-	-	-	-
	3 pole	7	7	7	7
	4 pole	8.4	8.4	7	7

Note) 1. ● applicable or available
2. ▲ available as a separate breaker

800			1200	1600
N-Type	S-Type	L-Type	S-Type	S-Type
EBN803c	EBS803c	EBL803c	EBS1003b	EBS1203b
-	-	-	-	-
Overload, Short-circuit and Ground fault			Overload, Short-circuit and Ground fault	
500, 630, 700, 800			1000	1200
30, 100/200/500mA			100/200/500mA	100/200/500mA
220/460	220/460	220/460	220/460	220/460
6	6	6	-	-
0.1 sec	0.1 sec	0.1 sec	0.1 sec	0.1 sec
37	65	85	85	85
50	85	125	125	125
100	100	75	-	-
A	A	A	-	-
2500	2500	2500	2500	2500
500	500	500	500	500
fixed	fixed	fixed	fixed	fixed
-	-	-	-	-
-	-	-	-	-
▲	▲	▲	-	-
●	●	●	●	●
●	●	●	●	●
●	●	●	-	-
●	●	●	-	-
●	●	●	-	-
●	●	●	-	-
●	●	●	-	-
●	●	●	-	-
●	●	●	-	-
●	●	●	-	-
●	●	●	-	-
●	●	●	-	-
●	●	●	-	-
●	●	●	-	-
●	●	●	-	-
210 × 280 × 109			220 × 565 × 105	
-	-	-	-	-
11.5	11.5	11.5	27.1	27.1
-	-	-	-	-

Air circuit breakers

Susol ACB Series

				Susol					
Type				AH-06D	AH-08D	AH-10D	AH-13D	AH-16D	AH-20D
Ampere frame	(AF)			630	800	1000	1250	1600	2000
Rated current(A)	(In max)		at 40℃	200 400 630	400 630 800	1000	1250	1600	2000
Setting current (A) *	Control trip relay (... × In max)			(0.4 ~ 1.0) × In max					
Rated current of neutral pole (A)				400 630	400 630 800	1000	1250	1600	2000
Rated insulation voltage (V)	(Ui)			1000					
Rated operating voltage (V)	(Ue)			690					
Rated impulse withstand voltage (kV)	(Uimp)			12					
Frequency (Hz)				50/60					
Number of poles (P)				3, 4					
Rated breaking capacity (kA sym)			220V/230V/380V/415V	85					
IEC 60947-2	(Icu)		460V/480V/500V	85					
AC 50/60Hz			550V/600V/690V	65					
Rated service breaking capacity (kA)	(Ics)		... % × Icu	100%					
Rated making capacity (kA peak)			220V/230V/380V/415V	187					
IEC 60947-2	(Icm)		460V/480V/500V	187					
AC 50/60Hz			550V/600V/690V	143					
Rated short-time			1sec	65					
withstand current (kA)	(Icw)		2 sec	60					
			3 sec	50					
Operating time (ms)			Maximum total breaking time	40					
			Maximum closing time	80					
Life cycle (time)		Mechanical	Without maintenance	20,000					
			With maintenance	30,000					
		Electrical	Without maintenance	5,000					
			With maintenance	10,000					
Connections **	Draw-out / Fixed		Horizontal connection	●					-
			Vertical connection	○					●
			Front connection	○					-
			Mixed connection	○					-
Weight (kg) (3P/4P)	Draw-out type	Main body (With cradle)	Motor charging type	63/74					70/85
			Manual charging type	61/72					68/83
		Cradle only		29/32					33/40
	Fixed type		Motor charging type	34/44					38/47
			Manual charging type	32/42					36/45
External dimensions (mm) (H × W × D)		Draw-out type	3P	430 × 334 × 375					
			4P	430 × 419 × 375					
		Fixed type	3P	300 × 300 × 295					
			4P	300 × 385 × 295					
Trip relay				N, A, P, S type					
Certificate & Approval				KS / KEMA / KERI / GOST					
Marine classification				LR, ABS, DNV, KR, BV, GL, RINA, NK					

* Refer to trip relay specification. ** ●: Standard, ○: Option

Susol								
AH-06E	AH-08E	AH-10E	AH-13E	AH-16E	AH-20E	AH-25E	AH-32E	AH-40E
630	800	1000	1250	1600	2000	2500	3200	4000
630	800	1000	1250	1600	2000	2500	3200	4000
(0.4 ~ 1.0) × In max								
630	800	1000	1250	1600	2000	2500	3200	4000
1,000								
690								
12								
50/60								
3, 4								
100								
100								
85								
100%								
220								
220								
187								
85								
75								
65								
40								
80								
15,000								
20,000								
5,000								
10,000								
●								○
○								●
○								-
○								-
87/103								104/147
85/101								102/145
44/55								58/70
44/55								63/100
42/53								61/98
430×412×375								
430×527×375								
300×378×295								
300×493×295								
N, A, P, S type								
KS / KEMA / KERI / GOST								
LR, ABS, DNV, KR, BV, GL, RINA, NK								

Susol		
AH-40G	AH-50G	AH-63G
4000	5000	6300
4000	5000	6300
(0.4 ~ 1.0) × In max		
4000	5000	6300
1,000		
690		
12		
50/60		
3, 4		
150		
150		
100		
100%		
330		
330		
220		
100		
85		
75		
40		
80		
10,000		
15,000		
2,000		
5,000		
○		
●		
-		
-		
181/223		186/230
179/221		184/228
97/117		102/124
98/123		103/130
96/121		101/128
460×785×375		
460×1015×375		
300×751×295		
300×981×295		
N, A, P, S type		
KS / KEMA / KERI / GOST		
LR, ABS, DNV, KR, BV, GL, RINA, NK		

Air circuit breakers

Metasol ACB Series

Type				Metasol					
				AN-06D	AN-08D	AN-10D	AN-13D	AN-16D	AS-20D
Ampere frame	(AF)			630	800	1000	1250	1600	2000
Rated current(A)	(In max)		at 40℃	200 400 630	400 630 800	1000	1250	1600	2000
Setting current (A) *	Control trip relay (... × In max)			(0.4 ~ 1.0) × In max					
Rated current of neutral pole (A)				400 630	400 630 800	1000	1250	1600	2000
Rated insulation voltage (V)	(Ui)			1000					
Rated operating voltage (V)	(Ue)			690					
Rated impulse withstand voltage (kV)	(Uimp)			12					
Frequency (Hz)				50/60					
Number of poles (P)				3, 4					
Rated breaking capacity (kA sym)			220V/230V/380V/415V	65					70
IEC 60947-2	(Icu)		460V/480V/500V	65					70
AC 50/60Hz			550V/600V/690V	50					65
Rated service breaking capacity (kA)	(Ics)		... % × Icu	100%					100%
Rated making capacity (kA peak)			220V/230V/380V/415V	143					154
IEC 60947-2	(Icm)		460V/480V/500V	143					154
AC 50/60Hz			550V/600V/690V	105					143
Rated short-time			1 sec	50					65
withstand current (kA)	(Icw)		2 sec	42					55
			3 sec	36					50
Operating time (ms)			Maximum total breaking time	40					
			Maximum closing time	80					
Life cycle (time)		Mechanical	Without maintenance	20,000					
			With maintenance	30,000					
		Electrical	Without maintenance	5,000					
			With maintenance	10,000					
Connections **	Draw-out / Fixed		Horizontal connection	●					-
			Vertical connection	○					●
			Front connection	○					-
			Mixed connection	○					-
Weight (kg) (3P/4P)	Draw-out type	Main body (With cradle)	Motor charging type	63/74					70/85
			Manual charging type	61/72					68/83
		Cradle only		29/32					33/40
	Fixed type		Motor charging type	34/44					38/47
			Manual charging type	32/42					36/45
External dimensions (mm) (H × W × D)		Draw-out type	3P	430 × 334 × 375					
			4P	430 × 419 × 375					
		Fixed type	3P	300 × 300 × 295					
			4P	300 × 385 × 295					
Trip relay				N, A, P type					
Certificate & Approval				KS / KEMA / KERI / GOST					
Marine classification				LR, ABS, DNV, KR, BV, GL, RINA, NK					

* Refer to trip relay specification. ** ●: Standard, ○: Option

Metasol				Metasol		Metasol		
AS-20E	AS-25E	AS-32E	AS-40E	AS-50F		AS-40G	AS-50G	AS-63G
2000	2500	3200	4000	4000	5000	4000	5000	6300
630, 800 1000, 1250 1600, 2000	2500	3200	4000	4000	5000	4000	5000	6300
(0.4 ~ 1.0) × In max				(0.4 ~ 1.0) × In max		(0.4 ~ 1.0) × In max		
630, 800 1000, 1250 1600, 2000	2500	3200	4000	4000	5000	4000	5000	6300
1,000				1000		1,000		
690				690		690		
12				12		12		
50/60				50/60		50/60		
3, 4				3, 4		3, 4		
85				100		120		
85				100		120		
85				85		100		
100%				100%		100%		
187				220		264		
187				220		264		
187				187		220		
85				85		100		
75				75		85		
65				65		75		
40				40		40		
80				80		80		
15,000				10,000		10,000		
20,000				15,000		15,000		
5,000				2,000		2,000		
10,000				5,000		5,000		
●			○	○		○		
○			●	●		●		
○			-	-		-		
○			-	-		-		
87/103			104/147	145/173		181/223		186/230
85/101			102/145	143/171		179/221		184/228
44/50			58/70	78/90		97/117		102/124
44/55			63/100	76/94		98/123		103/130
42/53			61/98	74/92		96/121		101/128
430 × 412 × 375				460 × 629 × 375		460 × 785 × 375		
430 × 527 × 375				460 × 799 × 375		460 × 1015 × 375		
300 × 378 × 295				300 × 597 × 295		300 × 751 × 295		
300 × 493 × 295				300 × 767 × 295		300 × 981 × 295		
N, A, P type				N, A, P type		N, A, P type		
KS / KEMA / KERI / GOST				KS / KEMA / KERI / GOST		KS / KEMA / KERI / GOST		
LR, ABS, DNV, KR, BV, GL, RINA, NK				LR, ABS, DNV, KR, BV, GL, RINA, NK		LR, ABS, DNV, KR, BV, GL, RINA, NK		

Trip relay(OCR)

The trip relay of Susol ACB provides the additional protection functions for voltage, frequency, unbalance, and others in addition to main protection functions for over current, short-circuit, ground fault. It supports the advanced measurement functions for voltage, current, power, electric energy, harmonics, communication function, and others.

Analog trip function interlocked with mechanism enhanced a durability of devices as well as the breaking capacity of ACB.

Zone selective interlocking function makes the protective coordination more simple and thermal memory can be applied to various loads.

Trip relay types

Classification	N type	A type	P type	S type
Externals				
Current protection	• L / S / I / G / Thermal	• L / S / I / G / Thermal • ZSI(Protective coordination)	• L / S / I / G / Thermal(Continuous) • ZSI(Protective coordination)	• P type
Other protection	-	• Earth leakage (Option)	• Earth leakage(Option) • Over/Under current • Over/Under frequency • Unbalance(Voltage/Current) • Reverse power	• P type
Measurement function	-	• Current (R / S / T / N)	• 3 Phase Voltage/Current RMS/Vector • Power(P, Q, S), PF(3-Phase) • Energy(Positive/Negative) • Frequency, Demand	• 3 Phase Voltage/Current RMS/Vector • Power(P, Q, S), PF(3-Phase) • Energy(Positive/Negative) • Frequency, Demand • Voltage/Current harmonics (1st~63th) • 3 Phase Waveforms • THD, TDD, K-Factor
Fine adjustment	-	-	• Fine adjustment for long/short time delay/instantaneous/ ground	• P type
Pre Trip Alarm	-	-	• Overload protection relays : DO (Alarm) (Ground fault is not available when using Pre trip alarm)	• P type
Digital Output	-	• 3DO (Fixed) • L, S/I, G Alarm	• 3DO (Programmable) • Trip, Alarm, General	• P type
IDMTL setting	-	-	• Compliance with IEC60255-3 SIT, VIT, EIT, DT	• P type
Communication	-	• Modbus/RS-485 • Profibus-DP	• Modbus / RS-485 • Profibus-DP	• Modbus / RS-485 • Profibus-DP
Power supply	• Self Power -Power source works over 20% of load current.	• Self Power - Power source works over 20% of load current. - External power source are required for comm. • AC/DC 100~250V • DC 24~60V	• AC/DC 100~250V • DC 24~60V Basic protection function(L / S / I / G) is still under normal operation without control power.	• AC/DC 100~250V • DC 24~60V
RTC timer	• Available	• Available	• Available	• Available
LED for trip info.	• Long time delay • Short time delay/Instantaneous • Ground fault	• N type	• N type	• N type
Fault recording	-	• 10records (Fault/Current/Date and Time)	• 256records (Fault/Current/Date and Time)	• 256records • Last fault wave recording (3 Phase)
Event recording	-	-	• 256 records(Content, Status, Date)	• P type
Operating button	• Reset button	• Reset, Menu Up/Down, Left/Right, Enter	• A type	• A type

LS Final Distribution Boards

LS Final Distribution Boards is fully type-tested by ASTA and specially designed for residential and commercial area for the protection of people and equipment.

شركة أبوظبي للتوزيع
Abu Dhabi Distribution Co.

Full range of Residential & Commercial Distribution System

Features:

- Designed to provide higher level of safety for final distribution board
- Pan assembly type busbar systems to provide easier cabling
- Split neutral bars provide easy connection and maximum cable space
- Easy and safe mounting of LS Miniature Circuit Breaker
- Flush and surface mounted
-Tin plate and cooper busbar
- Galvanized 1.2mm steel sheet

Technical Description

- In compliance with standards : IEC 60439-3
- Short-circuit withstand: 17kA/0.2s
- Peak short time withstand: 35kA
- Index of degree: IP 4X
- Rated operational Voltage(Ue): 415V
- Rated insulation Voltage(Ui): 460V
- Rated Frequence: 50/60Hz
- Rated impuls withstand Voltage(Uimp): 4kV
- Rated Current (In): Upto 125A

Internal view

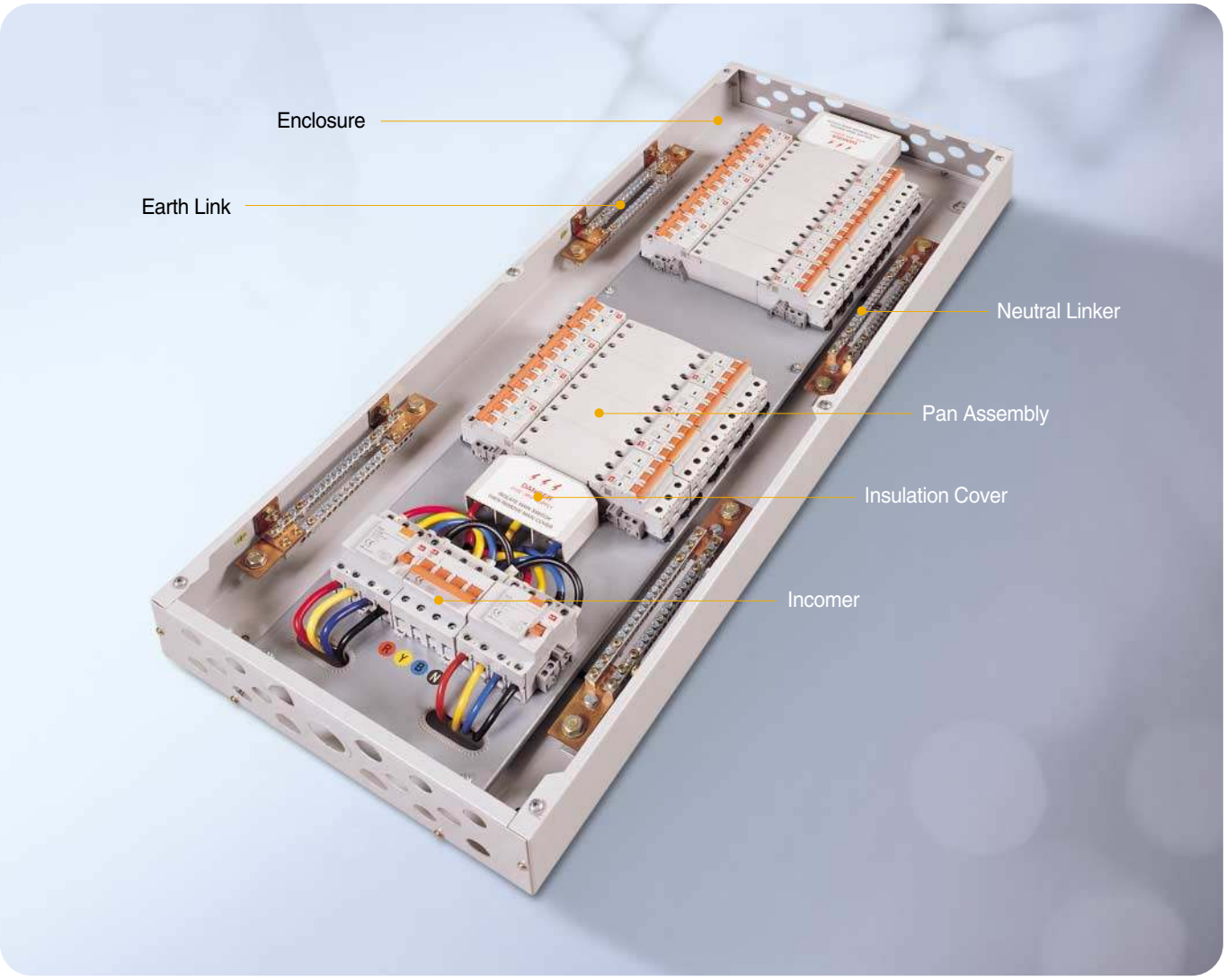

Pan Assembly System

- Rigid and removable pan assembly to provide easier cabling
- Modular panel system
- Flexible connect with CB, RCCB and Disconnect switch

LS Final Distribution Boards

Specific of FDB

Split busbar type

with incoming Isolator feeding two ELCBs

Side view

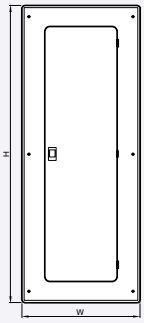

Front view

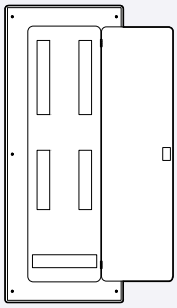

Door opened view

Selection of Enclosure

Code Description	Type	Dimension
02+02 Way Split DB	Flush	530H × 430W × 110D mm
04+02 Way Split DB		580H × 430W × 110D mm
04+04 Way Split DB		680H × 430W × 110D mm
06+04 Way Split DB		780H × 430W × 110D mm
06+06 Way Split DB		780H × 430W × 110D mm
08+06 Way Split DB		830H × 430W × 110D mm
08+08 Way Split DB		980H × 430W × 110D mm
10+08 Way Split DB		980H × 430W × 110D mm
12+06 Way Split DB		980H × 430W × 110D mm
02+02 Way Split DB	Surface	510H × 410W × 110D mm
04+02 Way Split DB		560H × 410W × 110D mm
04+04 Way Split DB		660H × 410W × 110D mm
06+04 Way Split DB		760H × 410W × 110D mm
06+06 Way Split DB		760H × 410W × 110D mm
08+06 Way Split DB		810H × 410W × 110D mm
08+08 Way Split DB		960H × 410W × 110D mm
10+08 Way Split DB		960H × 410W × 110D mm
12+06 Way Split DB		960H × 410W × 110D mm

Single busbar & Single Incomer type

With Incoming 4P ELCB/MCB/Isolator

Side view

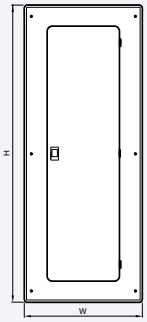

Front view

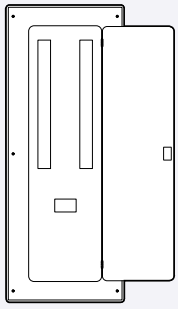

Door opened view

Selection of Enclosure

Code Description	Type	Dimension
4 Way DB 1 INC	Flush	530H × 430W × 110D mm
6 Way DB 1 INC		580H × 430W × 110D mm
8 Way DB 1 INC		680H × 430W × 110D mm
12 Way DB 1 INC		780H × 430W × 110D mm
14 Way DB 1 INC		830H × 430W × 110D mm
18 Way DB 1 INC		980H × 430W × 110D mm
20 Way DB 1 INC		Not Common
24 Way DB 1 INC		Not Common
4 Way DB 1 INC	Surface	510H × 410W × 110 D mm
6 Way DB 1 INC		560H × 410W × 110 D mm
8 Way DB 1 INC		660H × 410W × 110 D mm
12 Way DB 1 INC		760H × 410W × 110 D mm
14 Way DB 1 INC		810H × 410W × 110 D mm
18 Way DB 1 INC		960H × 410W × 110 D mm
20 Way DB 1 INC		Not Common
24 Way DB 1 INC		Not Common

Specific of FDB

Single busbar & Dual Incomer type

With Incoming Isolator & ELCB

Side view

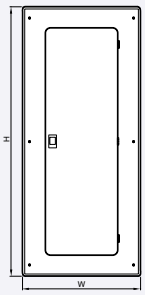

Front view

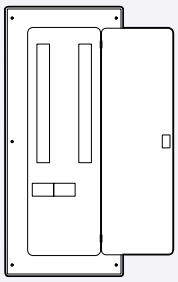

Door opened view

Selection of Enclosure

Code Description	Type	Dimension
4 Way DB 2 INC	Flush	530H × 430W × 110D mm
6 Way DB 2 INC		580H × 430W × 110D mm
8 Way DB 2 INC		680H × 430W × 110D mm
12 Way DB 2 INC		780H × 430W × 110D mm
14 Way DB 2 INC		830H × 430W × 110D mm
18 Way DB 2 INC		980H × 430W × 110D mm
20 Way DB 2 INC		Not Common
24 Way DB 2 INC		Not Common
4 Way DB 2 INC	Surface	510H × 410W × 110D mm
6 Way DB 2 INC		560H × 410W × 110D mm
8 Way DB 2 INC		660H × 410W × 110D mm
12 Way DB 2 INC		760H × 410W × 110D mm
14 Way DB 2 INC		810H × 410W × 110D mm
18 Way DB 2 INC		960H × 410W × 110D mm
20 Way DB 2 INC		Not Common
24 Way DB 2 INC		Not Common

SP&N Consumer Unit

Incoming 2P ELCB / MCB / Isolator

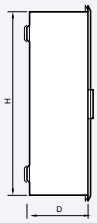

Side view

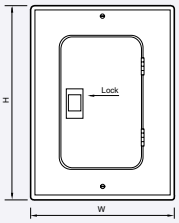

Front view

Selection of Enclosure

Code Description	Type	Dimension
6 Way 1P C.Unit		320H × 240W × 100D mm
9 Way 1P C.Unit		370H × 240W × 100D mm
12 Way 1P C.Unit		420H × 250W × 100D mm
15 Way 1P C.Unit		490H × 250W × 100D mm
18 Way 1P C.Unit		550H × 250W × 100D mm
22 Way 1P C.Unit		Not Common

LS SMDB Solution

- LS SMDB Solutions are arranged for 3 Phase and neutral incoming supply and specially designed easy to install MCCBs.
- These are fitted with Form 3b and 2 busbar assemblies, tested and ASTA Certified.

شركة أبوظبي للتوزيع
Abu Dhabi Distribution Co.

Rating

- A wide choice of incoming MCCBs make LS SMDB panesboards flexible to suit most of the requirements and represent excellent value and will apeal to consultants, contractors. end users and OEMs. These are offered in ratings of 125A, 250A, 400A, 630A.
- All incoming and outgoing MCCBs have Thermal/Magnetic fixed and adjustable tripping mechanisms incorporated with a trip-to-test button. These are available in ratings as follows : 16, 20, 25, 32, 40, 50, 63, 80, 100, 125, 160, 250, 400, 630A.

Technical Specifications

Constructional Characteristics

- Complied with IEC 60947-1
- Fully Type Tested, ASTA Certified
- Degree of protection : IP41 as per IEC 60529
- Form of separation: Form 3b
- Enclosure constructed from rigid folded zinc phosphate and protected both internally and externally with polyester powder coating

Electrical Characteristics

- Rated Operational Voltage Ue: upto 690V
- Rated Insulation voltage Ui: upto 750V
- Rated Frequency: 50/60Hz
- Rated Impulse withstand voltage Uimp: 8kV
- Rated Short time Icw & peak withstand Ipk Current: 36kA/1S

Incoming Devices

MCCB Panelboards

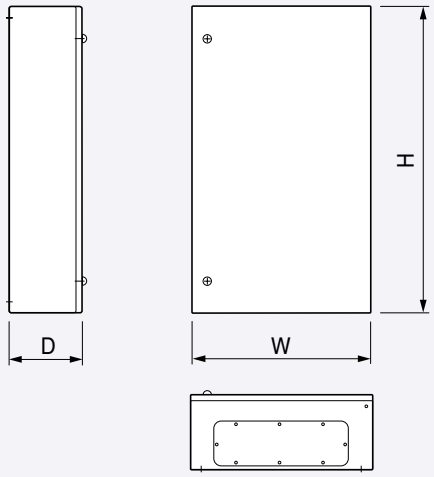

Metasol Series

Incoming Breaker 250 Amps Outgoing Breaker 100 Amps				Incoming Breaker 400 Amps Outgoing Breaker 100 Amps				Incoming Breaker 630 Amps Outgoing Breaker 100 Amps			
No of Ways	Width	Height	Depth	No of Ways	Width	Height	Depth	No of Ways	Width	Height	Depth
2	700	800	180	4	700	1000	250				
4	700	800	180	6	700	1000	250	6	800	1000	250
6	700	800	180	8	700	1200	250	8	800	1200	250
8	700	1000	180	10	700	1400	250	10	800	1400	250
10	700	1200	180	12	700	1400	250	12	800	1400	250
12	700	1200	180	14	700	1600	250	14	800	1600	250

Susol TD/TS Series

Incoming Breaker 250 Amps Outgoing Breaker 100 Amps				Incoming Breaker 400 Amps Outgoing Breaker 100 Amps				Incoming Breaker 630 Amps Outgoing Breaker 100 Amps			
No of Ways	Width	Height	Depth	No of Ways	Width	Height	Depth	No of Ways	Width	Height	Depth
2	700	800	180	4	700	1000	250				
4	700	800	180	6	700	1000	250	6	800	1000	250
6	700	800	180	8	700	1200	250	8	800	1200	250
8	700	1000	180	10	700	1400	250	10	800	1400	250
10	700	1200	180	12	700	1400	250	12	800	1400	250
12	700	1200	180	14	700	1600	250	14	800	1600	250

LS SMDB Solution

Incoming Devices

LSIS “Susol series” range of MCCBs

Rated current, In	250A 630A								
Rated operational voltage, Ue	750V								
MCCB breaker type	TS250			TS400			TS630		
Ultimate breaking capacity, Icu	N	H	L	N	H	L	N	H	L
(kA rms) at 415V	50	85	150	50	85	150	50	85	150
Service breaking capacity, Ics.....% Icu	100% Icu			100% Icu			100% Icu		
Protection trip unit	Thermal magnetic / Electronic								
Switch disconnector type TS	TS250NA			TS400NA			TS630NA		
Short-circuit making capacity Icm (kApeak) (with upstream circuit breaker)	4.9			7.1			8.5		

Incoming application

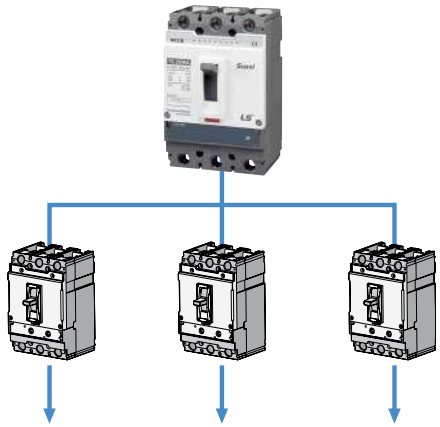

LSIS “Metasol series” range of MCCBs

Rated current, In	250A 630A		
Rated operational voltage, Ue	690V		
Breaker type	ABS203c	ABS403c	ABS803c
Ultimate breaking capacity, Icu (kA rms) at 415V	37	50	65
Service breaking capacity, Ics.....% Icu	100% Icu	100% Icu	100% Icu
Protection trip unit	Thermal magnetic		

Incoming application

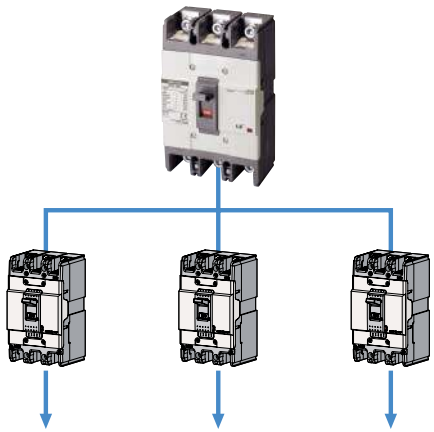

LSIS “Susol series” range of MCCBs

Rated current, In	16A 250A					
Rated operational voltage, Ue	upto 750V					
Breaker type	TD100, TD160, TS100, TS160, TS250					
	N		H		L	
No. of poles	1P	3P	1P	3P	1P	3P
Ultimate breaking capacity, Icu (kA rms) at 240V	30	100	50	120	-	200
Service breaking capacity, Ics.....% Icu	100% Icu					
Protection trip unit	Thermal magnetic / Electronic					

Incoming application

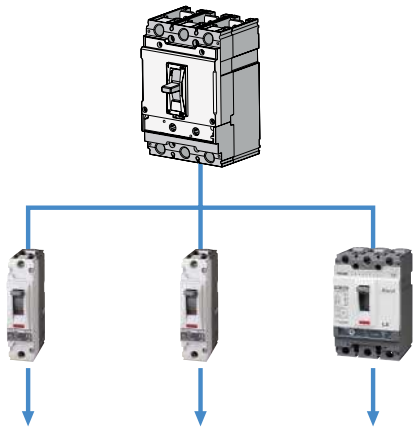

LSIS “Metasol series” range of MCCBs

Rated current, In	15A 100A					
Rated operational voltage, Ue	upto 415V - Single pole upto 690V - Three pole					
Breaker type	ABS103c					
	N		H		L	
No. of poles	2P	3P	2P	3P	2P	3P
Ultimate breaking capacity, Icu (kA rms) at 240V	35		85		100	
Ultimate breaking capacity, Icu (kA rms) at 415V	18		37		50	
Service breaking capacity, Ics.....% Icu	100% Icu					
Protection trip unit	Thermal magnetic					

Incoming application

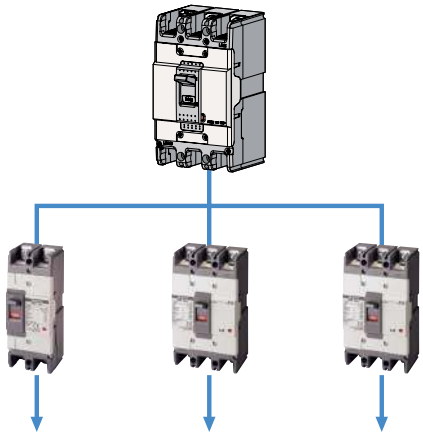

Vacuum Circuit Breakers

Susol VCB Series

VL 06

Type			VL-06□ 08□04	VL-06□13□ 06
Rated voltage		Ur (kV)	7.2	
Rated normal current		Ir (A)	400	630
Rated frequency		fr (Hz)	50/60	
Rated short-circuit current		Isc (kA)	8	12.5
Rated short-time withstand current (3 sec)		Ik (kA)	8	12.5
Rated short-circuit breaking capacity		(MVA)	100	160
Rated short-circuit making current		Ip (kA)	20.8	32.5
Rated breaking time		(cycle)	3	
Rated withstand voltage	Power frequency (1 min)	Ud (kV)	20	
	Impulse (1.2×50μs)	Up (kV)	60	
Rated operating sequence			O-0.3s-CO-15s-CO	
Control voltage	Closing coil	(V)	AC/DC 100~130V, AC/DC 200~250V, DC 125V, DC 24~30V, DC 48~60V, AC 48V	
	Trip coil	(V)	AC/DC 100~130V, AC/DC 200~250V, DC 125V, DC 24~30V, DC 48~60V, AC 48V	
Auxiliary contact			2a2b, 4a4b, 6a6b	
Rated opening time		(sec)	≤ 0.04	
No-load closing time		(sec)	≤ 0.06	
Type test	Mechanical		M2	
	Electrical		E2 (List1)	
	Capacitive current switching		C2	
Lifetime *	Mechanical	(time)	30000	
	Electrical	(time)	30000	
Installation	Fixed		P type	
	Draw-out		E, F, G type (for MESG)	
Pole centre distance		(mm)	130	
Weight	CB (E, F, G type)	(kg)	37	37
	Cradle (E, F, G type)	(kg)	18, 25, 32	19, 26, 33
Applied standards			IEC 62271-100, KS C 4611, JEC 2300/JIS C 4603	

* With maintenance

VL 06...17

Type			VL-06□20/25□06/13/20			VL-12□ 20/25□06/13/20			VL-17□20/25□06/13/20		
Rated voltage		Ur (kV)	7.2			12			17.5		
Rated normal current		Ir (A)	630	1250	2000	630	1250	2000	630	1250	2000
Rated frequency		fr (Hz)	50/60								
Rated short-circuit current		Isc (kA)	20/25								
Rated short-time withstand current (3 sec)		Ik (kA)	20/25								
Rated short-circuit breaking capacity		(MVA)	250/310			410/520			600/750		
Rated short-circuit making current		Ip (kA)	62.5/65								
Rated breaking time		(cycle)	3								
Rated withstand voltage	Power frequency (1 min)	Ud (kV)	20			28 (42)			38		
	Impulse (1.2×50μs)	Up (kV)	60			75			95		
Rated operating sequence			O-0.3s-CO-15s-CO								
Control voltage	Closing coil	(V)	DC 24~30V, DC 48~60V, DC 110V, DC 125V, DC 220V, AC 48V, AC 100~130V, AC 220~250V								
	Trip coil	(V)	DC 24~30V, DC 48~60V, DC 110V, DC 125V, DC 220V, AC 48V, AC 100~130V, AC 220~250V								
Auxiliary contact			4a4b, 10a10b								
Rated opening time		(sec)	≤ 0.04								
No-load closing time		(sec)	≤ 0.06								
Type test	Mechanical		M2								
	Electrical		E2 (List3)								
	Capacitive current switching		C2								
Lifetime *	Mechanical	(time)	30000								
	Electrical	(time)	30000								
Installation	Fixed		P type			P type					
	Draw-out		E, F, G type (for MESG), H type (for MCSG)			E, F type (for MESG), H type (for MCSG)					
Pole centre distance		(mm)	150			150 (210)			150 (210)		
Weight	CB (H type)	(kg)	100	100	130	115 (120)	115 (120)	130 (140)	115 (120)	115 (120)	130 (140)
	Cradle (H type)	(kg)	170	170	180	170 (200)	170 (200)	180 (200)	170 (200)	170 (200)	180 (200)
Applied standards			IEC 62271-100								

* With maintenance

VH 06...36

Type			VH-06□50□12/20/25/32/40					VH-12□50□12/20/25/32/40					VH-17□50□12/20/25/32			
Rated voltage		Ur (kV)	7.2					12					17.5			
Rated normal current		Ir (A)	1250	2000	2500	3150	4000	1250	2000	2500	3150	4000	1250	2000	2500	3150
Rated frequency		fr (Hz)	50/60													
Rated short-circuit current		Isc (kA)	50													
Rated short-time withstand current (3 sec)		Ik (kA)	50													
Rated short-circuit breaking capacity		(MVA)	623					1039					1515			
Rated short-circuit making current		Ip (kA)	130													
Rated breaking time		(cycle)	3													
Rated withstand voltage	Power frequency (1 min)	Ud (kV)	20					28					38			
	Impulse (1.2×50μs)	Up (kV)	60					75					95			
Rated operating sequence			O-0.3s-CO-3min-CO													
Control voltage	Closing coil	(V)	DC 48V, DC 110V, DC 125V, DC 220V, AC 48V, AC 110V, AC 220V													
	Trip coil	(V)	DC 48V, DC 110V, DC 125V, DC 220V, AC 48V, AC 110V, AC 220V													
Auxiliary contact			4a4b, 10a10b													
Rated opening time		(sec)	≤ 0.04													
No-load closing time		(sec)	≤ 0.06													
Type test	Mechanical		M2													
	Electrical		E2 (List3)													
	Capacitive current switching		C2													
Lifetime *	Mechanical	(time)	20000													
	Electrical	(time)	20000													
Installation	Fixed		P type				-	P type				-	P type			
	Draw-out		H type (for MCSG)				G type**	H type (for MCSG)				G type**	H type (for MCSG)			
Pole centre distance		(mm)	210	275			275	210	275			275	210	275		
Weight	CB (H type)	(kg)	230	287	290		385	230	287	290		385	230	287	290	
	Cradle (H type)	(kg)	175	320	320		315	175	320	320		315	175	320	320	
Applied standards			IEC 62271-100													

* With maintenance
** G type (for MCSG)

Type			VH-20□25□25	VH-20□32□12/20/32			VH-20□ 40□ 12/20/32		
Rated voltage		Ur (kV)	24/25.8						
Rated normal current		Ir (A)	2500	1250	2000	3150	1250	2000	3150
Rated frequency		fr (Hz)	60						
Rated short-circuit current		Isc (kA)	25	31.5			40		
Rated short-time withstand current (3 sec)		Ik (kA)	25	31.5			40		
Rated short-circuit breaking capacity		(MVA)	1039/1117	1309/1407			1662/1787		
Rated short-circuit making current		Ip (kA)	65	82			104		
Rated breaking time		(cycle)	3						
Rated withstand voltage	Power frequency (1 min)	Ud (kV)	60 (65)						
	Impulse (1.2×50μs)	Up (kV)	125						
Rated operating sequence			O-0.3s-CO-3min-CO						
Control voltage	Closing coil	(V)	DC 48V, DC 110V, DC 125V, DC 220V, AC 48V, AC 110V, AC 220V						
	Trip coil	(V)	DC 48V, DC 110V, DC 125V, DC 220V, AC 48V, AC 110V, AC 220V						
Auxiliary contact			4a4b, 10a10b						
Rated opening time		(sec)	≤ 0.04						
No-load closing time		(sec)	≤ 0.06						
Type test	Mechanical		M2						
	Electrical		E2 (List3)						
	Capacitive current switching		C2						
Lifetime *	Mechanical	(time)	20000						
	Electrical	(time)	20000						
Installation	Fixed		P type						
	Draw-out		H type (for MCSG)						
Pole centre distance		(mm)	275	210	210 (275)	275	210	210 (275)	275
Weight	CB (H type)	(kg)	295	256	256 (273)	318	256	256 (273)	318
	Cradle (H type)	(kg)	316	257	257 (284)	316	257	257 (284)	316
Applied standards			IEC 62271-100						

* With maintenance

Vacuum Circuit Breakers

Susol VCB Series

VH 06...36

Type			VH-36□25□12/20/32			VH-36□32□12/20/32			VH-36□40□12/20/32		
Rated voltage		Ur (kV)	36								
Rated normal current		Ir (A)	1250	2000	3150	1250	2000	3150	1250	2000	3150
Rated frequency		fr (Hz)	50/60								
Rated short-circuit current		Isc (kA)	25			31.5			40		
Rated short-time withstand current (3 sec)		Ik (kA)	25			31.5			40		
Rated short-circuit breaking capacity		(MVA)	1559			1964			2494		
Rated short-circuit making current		Ip (kA)	65			81.9			104		
Rated breaking time		(cycle)	3								
Rated withstand voltage	Power frequency (1 min)	Ud (kV)	70 (95)								
	Impulse (1.2×50μs)	Up (kV)	170								
Rated operating sequence			O-0.3s-CO-3min-CO								
Control voltage	Closing coil	(V)	DC 48V, DC 110V, DC 125V, DC 220V, AC 48V, AC 110V, AC 220V								
	Trip coil	(V)	DC 48V, DC 110V, DC 125V, DC 220V, AC 48V, AC 110V, AC 220V								
Auxiliary contact			4a4b, 10a10b								
Rated opening time		(sec)	≤ 0.04								
No-load closing time		(sec)	≤ 0.06								
Type test	Mechanical		M2								
	Electrical		E2 (List3)								
	Capacitive current switching		C2								
Lifetime *	Mechanical	(time)	20000								
	Electrical	(time)	20000								
Installation	Fixed		P type								
	Draw-out		H type (for MCSG)								
Pole centre distance		(mm)	300								
Weight	CB (H type)	(kg)	400		490	400		490	400		490
	Cradle (H type)	(kg)	700		750	700		750	700		750
Applied standards			IEC 62271-100								

* With maintenance

Accessories

Dimensions	Main	Cradle
	• Secondary trip coil • Under voltage trip release • Current trip coil • Position S/W • Keylock • Button padlock • Button cover • Mechanical position indicator	• Mechanical position indicator
	• Secondary trip coil • Under voltage trip release • Current trip coil • Position S/W • Keylock • Button padlock • Button cover • Plug interlock • Mechanical position indicator	• Earthing S/W • Earthing with electromechanical interlock • Earthing S/W with position S/W • Earthing S/W with keylock • Door interlock • MOC • TOC • Shutter padlock • Emergency mechanical trip device
	• Secondary trip coil • Under voltage trip release • Current trip coil • Position S/W • Keylock • Button padlock • Button cover • Plug interlock • Mechanical position indicator	• Earthing S/W • Earthing with electromechanical interlock • Earthing S/W with position S/W • Earthing S/W with keylock • Door interlock • MOC • TOC • Shutter padlock • Emergency mechanical trip device

Various type of Cradle

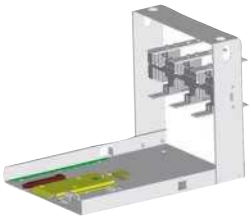

E type
- No Shutter
- For MESG

F type
- Insulation Shutter
- For MESG

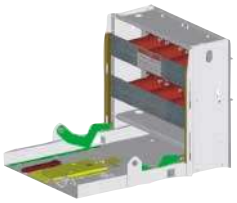

G type
- Bushing
- Insulation Shutter
- For MESG

H type
- Bushing
- Metal Insulation Shutter
- Closed Compartment structure
- Earthing Switch & Interlock
- For MCSG
- Door Interlock

Memo

Green Innovators of Innovation

Safety Instructions

- For your safety, please read user's manual thoroughly before operating.
- Contact the nearest authorized service facility for examination, repair, or adjustment.
- Please contact qualified service technician when you need maintenance.
  Do not disassemble or repair by yourself!
- Any maintenance and inspection shall be performed by the personnel having expertise concerned.

LSIS Co., Ltd.

© 2004.2 LSIS Co.,Ltd. All rights reserved.

www.lsis.biz

HEAD OFFICE

Korea Gyeonggi-do Anyang-si dongan-gu
LS-ro 127 (Hogye-dong)
Tel. (82-2)2034-4887, 4873, 4918, 4148
Fax. (82-2)2034-4648

CHEONG-JU PLANT

Cheong-Ju Plant #1, Song Jung Dong, Hung Duk Ku,
Cheong Ju, 361-720, Korea

Specifications in this catalog are subject to change without notice due to continuous product development and improvement.

Global Network

- **LSIS (Middle East) FZE >> Dubai, U.A.E.**
  Address: LOB 19 JAFZA VIEW TOWER Room 205, Jebel Ali Freezone P.O. Box 114216, Dubai, United Arab Emirates
  Tel: 971-4-886 5360 Fax: 971-4-886-5361 e-mail: jungyongl@lsis.biz
- **Dalian LSIS Co., Ltd. >> Dalian, China**
  Address: No.15, Liaohexi 3-Road, Economic and Technical Development zone, Dalian 116600, China
  Tel: 86-411-8273-7777 Fax: 86-411-8730-7560 e-mail: lixk@lsis.com.cn
- **LSIS (Wuxi) Co., Ltd. >> Wuxi, China**
  Address: 102-A , National High & New Tech Industrial Development Area, Wuxi, Jiangsu, 214028, P.R.China
  Tel: 86-510-8534-6666 Fax: 86-510-522-4078 e-mail: xuhg@lsis.com.cn
- **LSIS-VINA Co., Ltd. >> Hanoi, Vietnam**
  Address: Nguyen Khe - Dong Anh - Ha Noi - Viet Nam
  Tel: 84-4-882-0222 Fax: 84-4-882-0220 e-mail: srjo@lsisvina.com
- **LSIS-VINA Co., Ltd. >> Hochiminh , Vietnam**
  Address: 41 Nguyen Thi Minh Khai Str. Yoco Bldg 4th Floor, Hochiminh City, Vietnam
  Tel: 84-8-3822-7941 Fax: 84-8-3822-7942 e-mail: sbpark@lsisvina.com
- **LSIS Shanghai Office >> Shanghai, China**
  Address: Room E-G, 12th Floor Huamin Empire Plaza, No.726, West Yan'an Road Shanghai 200050, P.R. China
  Tel: 86-21-5237-9977 (609) Fax: 89-21-5237-7191 e-mail: jinhk@lsis.com.cn
- **LSIS Beijing Office >> Beijing, China**
  Address: B-Tower 17FL.Beijing Global Trade Center B/D. No.36, BeiSanHuanDong-Lu, DongCheng-District, Beijing 100013, P.R. China
  Tel: 86-10-5825-6025,7 Fax: 86-10-5825-6026 e-mail: cuixiaorong@lsis.com.cn
- **LSIS Guangzhou Office >> Guangzhou, China**
  Address: Room 1403,14F,New Poly Tower,2 Zhongshan Liu Road,Guangzhou, P.R. China
  Tel: 86-20-8326-6764 Fax: 86-20-8326-6287 e-mail: linsz@lsis.biz
- **LSIS Chengdu Office >> Chengdu, China**
  Address: Room 1701 17Floor, huanminhanjun internationnal Building, No1 Fuxing Road Chengdu, 610041, P.R. China
  Tel: 86-28-8670-3101 Fax: 86-28-8670-3203 e-mail: yangcf@lsis.com.cn
- **LSIS Qingdao Office >> Qingdao, China**
  Address: 7B40,Haixin Guangchang Shenye Building B, No.9, Shandong Road Qingdao 26600, P.R. China
  Tel: 86-532-8501-6568 Fax: 86-532-583-3793 e-mail: lirj@lsis.com.cn
- **LSIS NETHERLANDS Co.Ltd >> Netherlands**
  Address: 1st. Floor, Tupolevlaan 48, 1119NZ,Schiphol-Rijk, The Netherlands
  Tel: 31-20-654-1420 Fax: 31-20-654-1429 e-mail: junshickp@lsis.biz
- **LSIS Gurgaon Office >> Gurgaon ,India**
  Address: 109 First Floor, Park Central, Sector-30, Gurgaon- 122 002, Haryana, India

2011. 12

LSIS Electric Products (E) 2004. 02/(33) 2011. 12 Printed in Korea STAFF